CALOR SRL
Str. Progresului nr. 30-40, sector 5, Bucuresti
tel: 021.411.44.44, fax: 021.411.36.14
www.calorserv.ro - www.calor.ro

VENTS MAO1 Series

Axial window fans
for exhaust ventilation
with the capacity up to 345 m^3/h.

VENTS MAO2 Series

Axial window fans
for exhaust ventilation
with the capacity up to 232 m^3/h.

Applications

- Continuous or periodic exhaust ventilation of bathroom, showers, kitchens and other utility spaces.
- For mounting in windows.

Design

- Modern design and aesthetic look.
- The casing and the impeller are made of high-quality durable ABS plastic, UV resistant.
- The intellectual impeller design makes the fan efficiency high and the service life long.
- The fan and motor are specially designed for silent operation.
- Fan is equipped with a thermal actuator that provides smooth opening and shutting of automatic louver shutters for air back flow preventing.
- MAO2 Series fans are equipped with an external hood.
- Protection rating IP 24.

Motor

- Reliable and low-watt electric motor.
- Designed for continuous operation and requires no maintenance.
- Equipped with overheating protection.

Modifications and Options

MAO1 L / MAO2 L – the motor is equipped with ball bearings for long service life (appr. 40 thousand hours) and fan mounting at any angle. The bearings are maintenance-free and contain enough grease for the entire operating period.

MAO1 turbo / MAO2 turbo – high-powered motor.

MAO1 12 / MAO2 12 – equipped with a reliable low-voltage motor, 12 V.

MAO1 T / MAO2 T – equipped with a regulated timer with the operating time from 2 to 30 minutes.

MAO1 V / MAO2 V – equipped with a pull cord switch.

MAO1 VT / MAO2 VT – equipped with a pull cord switch and a regulated timer with the operating time adjustable from 2 to 30 minutes.

Control

Manual:

- The fan is controlled by a room light switch. It is not included in the delivery package.
- The fan is controlled by the built-in pull cord switch **V**.
- Speed control is possible through a thyristor speed controller (see Electrical Accessories). Several fans may connected to the same regulator unit.

Automatic:

- By the electronic control unit **BU-1-60** (see Electrical Accessories). The control unit is supplied separately.
- By the timer T (the built-in run-out timer enables the fan operation within 2 to 30 minutes after the fan switching off).

Mounting features

- The fan is mounted directly into the window opening.

Back side of MAO2 fan

Fan OFF - louver shutters CLOSED

Fan ON - louver shutters OPEN

Accessories

Speed controllers

Aerodynamic characteristics MAO1

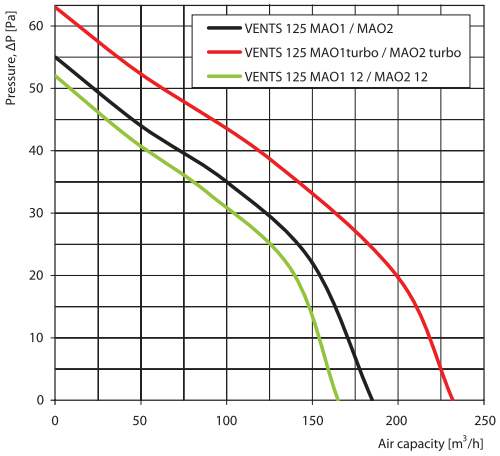

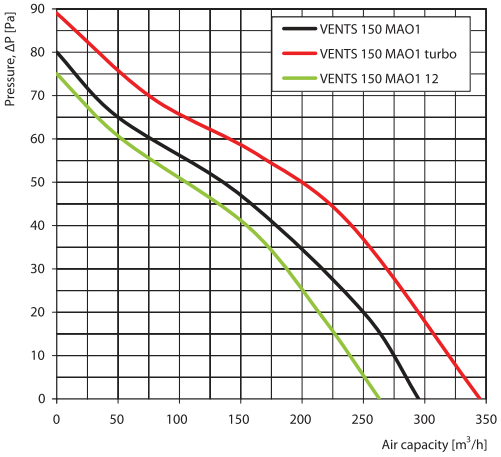

Technical data

Model	Voltage [V] at 50 Hz	Power Consumption [W]	Ток, А	r.p.m.	Maximum air capacity [m³/h]	Sound Pressure Level at 3m [dB(A)]	Weight [kg]
VENTS 125 MAO1	220-240	22	0,1	2400	185	35	1,15
VENTS 150 MAO1	220-240	26	0,13	2400	295	41	1,53
VENTS 125 MAO1 turbo	220-240	24	0,105	2400	232	37	1,31
VENTS 150 MAO1 turbo	220-240	30	0,13	2400	345	43	1,67
VENTS 125 MAO1 12	12	16	1,7	2300	165	34	1,13
VENTS 150 MAO1 12	12	24	2	2300	263	40	1,49
VENTS 125 MAO2	220-240	22	0,1	2400	185	35	1,14
VENTS 125 MAO2 turbo	220-240	24	0,105	2400	232	37	1,24
VENTS 125 MAO2 12	12	16	1,7	2300	165	34	1,12

Overall dimensions

Model	Dimensions [mm]					
	Ø D	B	H	H1	L1	L2
VENTS 125 MAO1	125	186	173	–	60	53
VENTS 150 MAO1	150	210	195	–	66	60
VENTS 125 MAO2	–	186	173	160	60	123

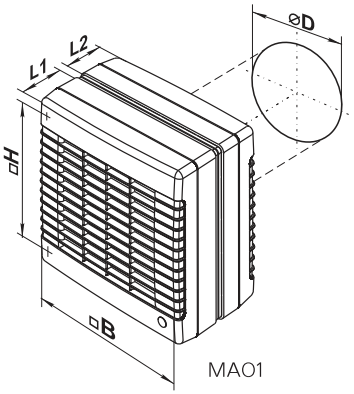

MAO1

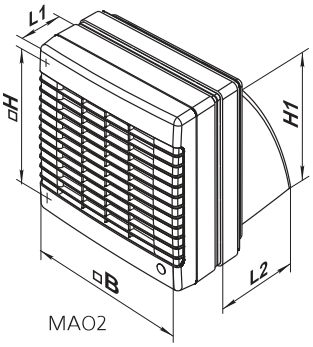

MAO2

Mounting examples

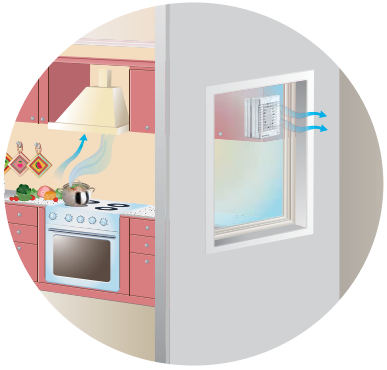

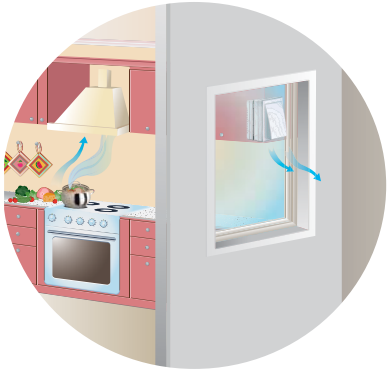

CALOR SRL
Str. Progresului nr. 30-40, sector 5, Bucuresti
tel: 021.411.44.44, fax: 021.411.36.14
www.calorserv.ro - www.calor.ro

Certificates

IP 24 The fans meet the applicable safety and electromagnetic compatibility standards.