TONONFORTY

the perfect climate

HOTTY

POMPE DE CALDURA AER APA PENTRU EXTERIOR

Temperaturi inalte - Eficienta ridicata

FREON R407c
Pf = 7,6 ÷ 21,7 kW
Pt = 9,1 ÷ 24,8 kW
Mod. 031 ÷ 081

Temperatura maxima apa 60 °C

CE

CALOR SRL - Str. Progresului nr. 30-40, sector 5, Bucuresti - tel / fax : 021.411.44.44 / 021.411.36.14
www.calorserv.ro - ofertare@calor.ro - www.calor.ro

CARACTERISTICI PRINCIPALE

HOTTY este o pompa de caldura aer apa conceputa pentru utilizarea in cladiri rezidentiale sau comerciale, noi sau renovate.

Utilizeaza tehnologia E.V.I. (cu injectie de vapori), care le permite extinderea semnificativa a limitelor de operare.

Aceasta metoda asigura o eficienta ridicata prin utilizarea sistemelor de climatizare de tip radiant.
Mai mult, ofera rezultate excelente cand este instalata in cladiri renovate, unde adesea este necesara incalzirea agentului termic la temperaturi ridicate cand conditiile climatice exterioare sunt severe.

HOTTY transfera energia naturala din exterior catre mediul din interior, asigurand conditii climatice ideale pe tot timpul anului si furnizand necesarul de apa calda menajera pentru fiecare zi.

Pompele de caldura Hotty sunt echipate standard cu un kit hidronic si utilizeaza un nou dispozitiv de reglare ce permite functionarea excelenta fara a mai fi necesara instalarea unui vas de acumulare inertial. Aceasta solutie faciliteaza instalarea, reducand spatiul si costurile relative precum si dispersia inutila de caldura catre exterior.
Pompele de caldura Hotty pot functiona cu temperaturi de pana la -20°C, incalzind apa la temperaturi inalte (max 60°C).
Controlul ventilatiei optimizeaza functionarea chiar si cand temperatura exterioara este scazuta si, in acelasi timp, reduce nivelul de zgomot cand functioneaza pe timpul noptii.

Dispozitivul de control electronic asigura incalzirea apei menajere cu prioritate si permite setarea unor niveluri diferite de temperatura pentru agentul termic si A.C.M .

Produsul a fost creat utilizand cele mai noi tehnologii si a fost testat in laboratoare pentru a garanta eficienta si fiabilitate in timp.

CARACTERISTICI TEHNICE

Cadru de sustinere.Unitatile sunt asamblate pe un cadru realizat in totalitate din tabla de otel galvanizat cu panouri detasabile pentru o intretinere usoara, fiind vopsite cu pudra din poliester RAL 9018.

Compresorul este de tip scroll ermetic cu sistem avansat de injectie a vaporilor, fiind indicat pentru aplicatii rezidentiale de aer conditionat, furnizand eficienta ridicata si functionand la un nivel redus de zgomot. Motorul este instalat pe un suport anti-vibratii si este protejat cu o siguranta automata.

Condensatorul este realizat din tuburi de cupru cu aripioare din aluminu, iar suportul schimbatorului de caldura este realizat din otel zincat.
La cerere, pot fi furnizate si versiuni cu aripioare din cupru sau aluminiu prevopsite, pentru instalarea in spatii cu conditii de lucru dure.

MAIN FEATURES

***HOTTY** is a reversible air to water heat pump designed for use in new or refurbished residential and commercial buildings.*

It uses E.V.I. (Enhanced Vapour Injection) technology, which allows significantly extend the operating limits of the appliance.

This method provides an high-energy efficiency using ray air conditioning systems.
Moreover, it provides excellent results when installed in renovated buildings where it is often necessary to heat water to high temperatures when outdoor climatic conditions are severe.

Hotty conveys the natural energy in the air to the home environment, providing ideal climatic conditions all year round and supplying the domestic hot water required on a day-to-day basis

Hotty units are equipped with hydronic kits standard onboard the machine and use a new regulation device that allows excellent operation without the need to install an inertial accumulation tank. This ready-to-use solution facilitates installation, reducing space and the relative costs in addition to avoiding the useless dispersion of heat to the outside.
Hotty heat pumps are able to operate with very strict ambient air temperatures (down to -20 ℃) by heat ing the water at high temperature (60 ℃ max)

Hotty units have a ventilation control that optimizes operation even with low outside air temperatures and, at the same time, reduces noise when operating at night.

The electronic control device manages the domestic water heating under priority and it allows different temperature set point setting to the user plant water and d.h.w. side.

The product was developed using the most current design technologies and tested in our laboratories to guarantee efficiency and absolute reliability over time.
The Hotty product line is another tile in our mosaic of hydronic products for air-conditioning that range from special hot/cold production units to plant terminal units.

UNIT TECHNICAL CHARACTERISTICS

***Supporting Frame.** The units are assembled on a frame made entirely of galvanized sheet metal with removable panels for easy maintenance and all painted with oven-baked RAL 9018 polyester powder.*

***Compressor** leading brand hermetic scroll with E.V.I. (Enhanced Vapour Injection) particularly indicated for residential air-conditioning applications and able to provide highefficiency and, at the same time, decidedly modest levels of noise and vibration. Installed on vibration-damping supports, the motor is protected by a circuit-breaker.*

Capacitor - made of

Anumite tevi, de la baza schimbatorului, sunt utilizate pentru agentul refrigerent pentru a ajuta la dezghetarea schimbatorului de caldura pe timpul iernii, cand temperaturile scad sub 0°C.

Evaporatorul de caldura in placi brazat este realizat din otel inoxidabil AISI316, cu izolatie anti-condens.
Este furnizat cu racorduri filetate pentru o conectare usoara la instalatia clientului. La cerere, se furnizeaza si elemente incalzitoare anti-inghet.

Schimbatorul secundar in placi brazat este utilizat pentru a vaporiza complet refrigerentul la intrarea in compresor. Caldura este transferata prin lichidul refrigerent colectat

pe circuitul principal.
Sectiunea de ventilatie este compusa din ventilator axial si motor cuplat direct la statorul rotativ. Ventilatorul este instalat pe un suport proiectat corespunzator pentru a garanta o performanta mai buna si este echipat cu grilaje de protectie realizate din otel galvanizat, fixate adecvat pe cadrul aparatului cu elemente din cauciuc.

Circuitul frigorific este conectat si etans, fiind realizat cu conducte din cupru, incluzand:
filtru dehidrator, electrovalva si valva termostatica pentru ciclul de injectie, valva cu 4 cai pentru inversiunea ciclului, presostat de siguranta cu egalizare externa, racorduri de presiune pentru umplere si golire lichid refrigerent si legarea eventuala a manometrelor de control. Traductorii de presiune LP si HP sunt furnizati standard. Partea cu presiune joasa este izolata cu un element inchis, cu suport

anti-condens.
Kitul hidronic include pompa de circulatie apa, vasul de expansiune, supapa de siguranta, presostatul diferential pentru controlul debitului de apa si conducte izolate cu elemente anti-condens.

Panoul electric este cablat complet si are carcasa din otel, fiind construit in conformitate cu cele mai riguroase standarde europ ene. Tensiunea de alimentare este: 400/3/50 V/ph/Hz.
Circuitul auxiliar are protectie separata.

Reglarea si controlul sunt realizate de catre un microprocesor prin intermediul unor dispozitive externe de siguranta.
Progamarea, setarea si controlul parametrilor de functionare sunt realizate direct pe modulul de afisare localizat in afara panoului de control.
Functii principale de reglare:
- incalzire / racire si preparare apa calda menajera, cu prioritate asupra apei calde menajere;

copper tubes in an aluminum finned pack and frame supporting the galvanized steel exchanger. On request, a version an be supplied with prepainted copper or aluminum fins for installation in especially aggressive environments.

Some pipes, on the bottom of the exchanger, are used for the coolant liquid to help defrost the heat exchanger during the winter period when air temperatures drops below 0 °C.

Brazed Plate- evaporator *AISI316 stainless steel made, insulated with a closed-cell anticondensate insulation. Provided with threaded water fittings for easy connection to the user's plant. Upon request, we also supply frost-prevention heating elements.*

Auxiliary brazet plate heat **exchanger** *used to vaporize the refrigerant injection on the compressor. Heat is transferred through the liquid refrigerant collected on the main line.*

Fan section *consists of fan / propeller blade set and the motor directly coupled to rotary stator. The fan is installed on a properly shaped nozzle to ensure better air performance and is equipped with safety protection grills made of galvanized steel suitably fixed to the machine frame with rubber mountings.*

Refrigeration circuit *completed wired and sealed, made with copper tube, including:*
dehydrator filter, thermostatic value with external equalization, safety pressure switch on the high and low pressure side, pressure fitting for filling and discharging refrigerant liquid and possible connection of control manometers. LP and HP transducers are supplied as standard. The low-pressure side is insulated with a thick, closed cell anti-condensation pad.

Hydronic kit *including the water pump, the expansion vessel, the safety valve, the differential pressostat to control the water flow and the piping insulated with high tickness closet cell anti-condensation pad.*

Electrical panel *completely wired inside a steel box constructed in conformity with the most rigorous European standards. The power circuit is prepared for 400/3/50 V/ ph/Hz power. The auxiliary circuit has separate circuitbreaker protection. Regulation and control are handled by a microprocessor coupled to on-board or externallyconnected safety devices.*
The programming, setting and control of operating parameters is performed directly on the display module located on the outside of the control panel

Main regulation functions:
Main adaptive regulation functions:
- Heating / cooling and D.H.W. control with priority to the D.H.W.
In cooling mode, if domestic hot water is reqiired, the system automatically handles the switching system to meet the heating temperature d.h.w. request to take back under the cooling operation.
- Compressor control as a function of the temperature of the return water or, upon request, the water output by the plant.

- controlul compresorului in functie de valoarea temperaturii de retur a apei sau, la cerere, in functie de valoarea temperaturii de tur. In modul de racire, daca este necesara producerea de apa calda menajera, sistemul manevreaza automat comutarea pentru a atinge temperatura apei calde menajere ceruta.

- puncte de setare automate si dinamice in concordanta cu temperatura ambientala

- diferite setari de temperatura pentru agentul termic si A.C.M

- vana cu 3 cai pentru a acorda prioritate apei calde menajere

- dezghetare dinamica in functie de temperatura externa

- controlul turatiei ventilatorului

Accesorii disponibile la cerere:

- MHL
manometre presiune inalta si joasa;
- RAE
vaporizator rezistent la inghet;
- SAB
suport anti-vibratii;
- KRC
kit cu telecomanda
- RCA
rezistenta compresor;
- SSC - pornire electronica
cu functia de limitare a valorilor curentului de intrare < 40 A pentru modelele monofazate
- K3V - kit vana cu 3 cai
kit livrat separat , alcatuit din vana motorizata cu 3 cai si senzor de temperatura NTC pentru a fi montat pe vasul de apa calda menajera.
- KRC - panou control ambient
Panou de control cu urmatoarele functii:
ON/OFF, vara-iarna, setare timp de functionare dupa ceas, vizualizare temperaturi.
- KRI (1) - incalzitor electric pentru apa calda menajera
- KRI (2) - incalzitor electric cu anti-inghet
Accesorii instalate din fabrica: Tava de colectare a condensului incalzita electric pentru prevenirea inghetului.

- Filtru Y

VAS DE ACUMULARE:
Kit livrat separat. Vas de acumulare asamblat intr-un cadru de otel pentru a fi montat sub unitate
(modelele 031-041-061, cu un volum de 70 litri) sau separat pentru modelul 081, cu un volum de 100 litri.

- Automatic and dynamic set points according to the ambient air temperature.
- Different temperature set points on user plant side and DH.W. side.
- Three way valve control (accessory) to provide priority to D.H.W.
- Dynamic defrosting acording to externe air temperature.
- Fan speed control

Accessories available upon request
:
- MHL
high and low-pressure gauges
- RAE
evaporator frost-resistance;
- SAB
basic vibration-damping supports;
- KRC
remote control kit;
- SSC
Electronic Soft Starter
with the function of limiting the inrush current values <40 A for single phase units.
- K3V
Kit supplied separately, consisting of motorized three-way valve ball type and NTC temperature sensor to be placed on the d.h.w. vessel.
- KRC
Remote room control panel able to control the following functions:
On/off control, summer-winter switching, working time setting by clock, temperatures reading.
- KRI (1)
D.h.w. vessel integration electric heater.
- KRI(2)
Drain panel antifreeze Electric heater
Factory-installed accessory. It avoids water freezing contained in the tank with low ambient air temperatures.
- KFR
Mesh water strainer

BUFFER TANK (user plant side)
Kit supplied separately. Water vessel assembled into a steel supporting frame to be fitted under the unit (models 031-041-061) or separately on model 081

CONFIGURARE

Model: HOTTY 041MC

HOTTY	041	M	C
TIP UNITATE	DIMENSIUNE	TENSIUNE DE ALIMENTARE	TIP REFRIGERENT

DIMENSIUNE 041

04	Dimensiune compresor in HP
1	Numar compresoare

TENSIUNE DE ALIMENTARE

M	230-1-50 V-ph-Hz
T	400-3-50 V-ph-Hz

TIP REFRIGERENT

C	R407C

VAS DE ACUMULARE (OPTIONAL)

Toate modelele pot fi echipate cu rezervor de acumulare inertial situat la baza sau langa, in functie de model.

CONFIGURATION

Sample: HOTTY 041MC

HOTTY	*041*	*M*	*C*
UNIT TYPE	*SIZE*	*SUPPLY VOLTAGE*	*REFRIGERANT TYPE*

SIZE 041

04	*Compressor size _HP_*
1	*N° of compressors*

SUPPLY VOLTAGE

M	230-1-50 V-ph-Hz
T	400-3-50 V-ph-Hz

REFRIGERANT TYPE

C	*R407C*

BUFFER TANK (OPTIONAL)

All models can be equipped with inertial storage water tank located under or next to the equipment according to the model

MODEL 031C-041C-041CM-061C
Instalare la baza

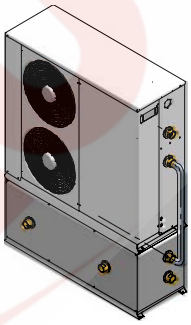

MODELS 031C-041C-041CM-061C
Bottom installation

MODEL 081 C
Instalare laterala

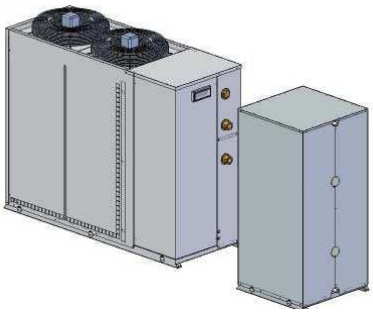

MODEL 081 C
Side installation

DATE TEHNICE

TECHNICAL DATA

MODEL		***HOTTY***	**031MC**	**041MC**	**041TC**	**061TC**	**081TC**
Capacitate de racire *(1)*		kW	7,6	11,5	11,6	16,3	21,7
Capacitate de incalzire *(2)*		kW	9,1	13,3	13,3	18,7	24,8
Compresor Scroll		nr	1	1	1	1	1
Circuite frigorifice		nr	1	1	1	1	1
Treapta de reglare a capacitatii		%	1	1	1	1	1
Tensiune de alimentare		V/Hz/Ph	230/1/50		400/3/50		
Nivel putere acustica	LwA *(3)*	dB(A)	47.5	48	48	48.5	48.8
Nivel presiune acustica	*LpA (4)*	dB(A)	75	75.5	75.5	76	76.3
COMPRESOR							
Putere consumata	*(1)*	kW	2,7	3,8	3,6	5,1	6,8
Curent consumat	*(1)*	A	13,7	20,5	6,5	10,6	13,2
Curent maxim		A	20,8	30,0	10,0	14,0	18,3
Curent consumat la pornire		A	97,0	160,0	64,0	92,0	99,0
SCHIMBATOR DE CALDURA							
Schimbator de caldura		nr	1	1	1	1	1
Debit de apa		l/s	0,36	0,55	0,56	0,78	1,04
Pierderi de presiune		kPa	6	7,1	7,3	14,2	14,5
VENTILATOR							
Ventilatoare		nr	2	2	2	2	2
Debit de aer		m3/s					
Numar de rotatii		min -1	890	890	890	890	890
Putere absorbita (1 singur ventilator)		kW	0,17	0,17	0,17	0,3	0,3
Curent absorbit (1 singur ventilator)		A	0,8	0,8	0,8	1,4	1,4
POMPA DE CIRCULATIE							
Presiune disponibila pompa		kPa	60	52	51	72	64
Putere absorbita pompa		kW	0,21	0,2	0,21	0,4	0,4
Curent absorbit pompa		A	1,0	1,0	1,0	2,0	2,0
CONSUMURI TOTALE							
Putere nominala	*(1)*	kW	3,3	4,4	4,2	6,1	7,8
Curent nominal	*(1)*	A	16,3	23,1	9,1	15,4	18,0
Curent maxim		A	23,4	32,6	12,8	18,1	18,8
Curent de pornire		A	100,0	163,0	67,0	97,0	10
VAS DE EXPANSIUNE							
Volum		l	6	6	6	6	10
Presiune maxima apa		kPa	300	300	300	300	300
Presiune de preincarcare		kPa	150	150	150	150	150
DIMENSIUNI - GREUTATE							
lungime		mm	1220	1420			1670
latime		mm	427	531			620
inaltime		mm	1115	1215			1400
greutate		Kg	158	183	186	223	282

(1) temp. ambientala 35°C - temp. apa iesire 7°C
(2) temp. ambientala 7°C / UR 85% - temp. apa iesire 35°C
(3) Conform cu ISO 3744
(4) Masurat in camp liber la 10 m distanta

(1) *ambient temp. 35 °C - water temp. out 7 °C*
(2) *ambient temp. 7 °C / 85% RU - water t. Out 35 °C*
(3) *According ISO 3744*
(4) *measured in free field condition at 10 m distance*

PERFORMANTE DE INCALZIRE

HEATING PERFORMANCE

HOTTY 031 M

Te bs/bu \ Tu	35			40			45		
	PT	Pa	PaT	PT	Pa	PaT	PT	Pa	PaT
-20	4,53	1,82	2,14	4,56	1,94	2,26	4,61	2,08	2,40
-15/-15,4	5,23	1,91	2,23	5,27	2,05	2,37	5,31	2,19	2,51
-10/-10,5	6,03	1,99	2,31	6,06	2,14	2,46	6,10	2,30	2,62
-5/-5,5	6,88	2,07	2,39	6,90	2,22	2,54	6,93	2,40	2,72
0/-0,6	7,82	2,14	2,46	7,83	2,30	2,62	7,85	2,49	2,81
2/1	8,15	2,16	2,48	8,15	2,33	2,65	8,17	2,52	2,84
5/4	8,73	2,20	2,52	8,72	2,38	2,70	8,74	2,57	2,89
7/6	9,08	2,23	2,55	9,07	2,41	2,73	9,08	2,61	2,93
10/8,3	9,80	2,28	2,60	9,78	2,47	2,79	9,78	2,68	3,00
15/13,5	11,08	2,34	2,66	11,04	2,55	2,87	11,02	2,77	3,09
20/18,3	12,58	2,42	2,74	12,52	2,64	2,96	12,48	2,88	3,20

Te bs/bu \ Tu	50			55			60		
	PT	Pa	PaT	PT	Pa	PaT	PT	Pa	PaT
-20	4,67	2,25	2,57	4,76	2,44	2,76			
-15/-15,4	5,37	2,38	2,70	5,46	2,58	2,90	5,57	2,82	3,14
-10/-10,5	6,16	2,50	2,82	6,24	2,72	3,04	6,34	2,97	3,29
-5/-5,5	6,98	2,60	2,92	7,05	2,84	3,16	7,15	3,11	3,43
0/-0,6	7,89	2,71	3,03	7,95	2,96	3,28	8,04	3,24	3,56
2/1	8,20	2,75	3,07	8,26	3,00	3,32	8,34	3,29	3,61
5/4	8,76	2,81	3,13	8,81	3,07	3,39	8,89	3,37	3,69
7/6	9,10	2,85	3,17	9,15	3,13	3,45	9,22	3,43	3,75
10/8,3	9,79	2,93	3,25	9,83	3,21	3,53	9,89	3,52	3,84
15/13,5	11,02	3,04	3,36	11,03	3,34	3,66	11,08	3,67	3,99
20/18,3	12,46	3,17	3,49	12,45	3,49	3,81	12,48	3,84	4,16

HOTTY 041 M

Te bs/bu \ Tu	35			40			45		
	PT	Pa	PaT	PT	Pa	PaT	PT	Pa	PaT
-20	6,59	2,60	2,92	6,74	2,84	3,16	6,89	3,10	3,42
-15/-15,4	7,71	2,72	3,04	7,87	2,98	3,30	8,04	3,27	3,59
-10/-10,5	8,92	2,81	3,13	9,09	3,09	3,41	9,27	3,40	3,72
-5/-5,5	10,15	2,86	3,18	10,32	3,16	3,48	10,49	3,48	3,80
0/-0,6	11,51	2,91	3,23	11,66	3,21	3,53	11,82	3,55	3,87
2/1	11,96	2,93	3,25	12,12	3,24	3,56	12,27	3,58	3,90
5/4	12,78	2,96	3,28	12,92	3,27	3,59	13,06	3,61	3,93
7/6	13,28	2,99	3,31	13,41	3,30	3,62	13,54	3,65	3,97
10/8,3	14,28	3,03	3,35	14,39	3,35	3,67	14,50	3,70	4,02
15/13,5	16,03	3,08	3,40	16,11	3,40	3,72	16,18	3,77	4,09
20/18,3	18,09	3,17	3,49	18,11	3,49	3,81	18,13	3,86	4,18

Te bs/bu \ Tu	50			55			60		
	PT	Pa	PaT	PT	Pa	PaT	PT	Pa	PaT
-20	7,07	3,44	3,76	7,27	3,82	4,14			
-15/-15,4	8,24	3,64	3,96	8,45	4,06	4,38	8,45	4,27	4,59
-10/-10,5	9,46	3,78	4,10	9,68	4,23	4,55	9,73	4,54	4,86
-5/-5,5	10,68	3,88	4,20	10,88	4,36	4,68	10,97	4,74	5,06
0/-0,6	11,99	3,97	4,29	12,17	4,46	4,78	12,26	4,89	5,21
2/1	12,43	4,00	4,32	12,60	4,50	4,82	12,75	5,01	5,33
5/4	13,21	4,05	4,37	13,36	4,55	4,87	13,48	5,06	5,38
7/6	13,68	4,09	4,41	13,83	4,60	4,92	13,93	5,12	5,44
10/8,3	14,62	4,15	4,47	14,74	4,67	4,99	14,81	5,18	5,50
15/13,5	16,25	4,22	4,54	16,32	4,76	5,08	16,32	5,27	5,59
20/18,3	18,14	4,33	4,65	18,05	4,76	5,08	18,06	5,37	5,69

PERFORMANTE DE INCALZIRE

HEATING PERFORMANCE

HOTTY 041 T

Te bs/bu \ Tu	35			40			45		
	PT	Pa	PaT	PT	Pa	PaT	PT	Pa	PaT
-20	6,59	2,48	2,80	6,74	2,74	3,06	6,90	3,01	3,33
-15/-15,4	7,70	2,60	2,92	7,85	2,87	3,19	8,01	3,16	3,48
-10/-10,5	8,90	2,67	2,99	9,05	2,96	3,28	9,21	3,27	3,59
-5/-5,5	10,13	2,73	3,05	10,28	3,03	3,35	10,43	3,35	3,67
0/-0,6	11,48	2,77	3,09	11,62	3,08	3,40	11,76	3,41	3,73
2/1	11,94	2,79	3,11	12,08	3,10	3,42	12,21	3,44	3,76
5/4	12,75	2,81	3,13	12,88	3,13	3,45	13,01	3,47	3,79
7/6	13,25	2,84	3,16	13,38	3,16	3,48	13,49	3,51	3,83
10/8,3	14,25	2,88	3,20	14,37	3,20	3,52	14,47	3,56	3,88
15/13,5	16,01	2,92	3,24	16,10	3,25	3,57	16,17	3,61	3,93
20/18,3	18,07	2,98	3,30	18,13	3,32	3,64	18,17	3,70	4,02

Te bs/bu \ Tu	50			55			60		
	PT	Pa	PaT	PT	Pa	PaT	PT	Pa	PaT
-20	7,09	3,34	3,66	7,32	3,70	4,02			
-15/-15,4	8,21	3,51	3,83	8,42	3,90	4,22	8,67	4,33	4,65
-10/-10,5	9,39	3,64	3,96	9,60	4,05	4,37	9,83	4,50	4,82
-5/-5,5	10,60	3,73	4,05	10,78	4,16	4,48	10,99	4,63	4,95
0/-0,6	11,91	3,81	4,13	12,07	4,25	4,57	12,25	4,74	5,06
2/1	12,35	3,84	4,16	12,50	4,29	4,61	12,68	4,79	5,11
5/4	13,14	3,88	4,20	13,27	4,34	4,66	13,43	4,84	5,16
7/6	13,61	3,92	4,24	13,74	4,39	4,71	13,89	4,90	5,22
10/8,3	14,57	3,98	4,30	14,68	4,46	4,78	14,80	4,98	5,30
15/13,5	16,24	4,05	4,37	16,32	4,54	4,86	16,40	5,07	5,39
20/18,3	18,20	4,14	4,46	18,23	4,65	4,97	18,26	5,20	5,52

HOTTY 061 T

Te bs/bu \ Tu	35			40			45		
	PT	Pa	PaT	PT	Pa	PaT	PT	Pa	PaT
-20	9,57	3,62	4,20	9,64	3,91	4,49	9,76	4,23	4,81
-15/-15,4	11,12	3,77	4,35	11,21	4,10	4,68	11,35	4,47	5,05
-10/-10,5	12,79	3,87	4,45	12,89	4,24	4,82	13,04	4,64	5,22
-5/-5,5	14,49	3,94	4,52	14,59	4,32	4,90	14,74	4,75	5,33
0/-0,6	16,34	3,98	4,56	16,43	4,39	4,97	16,58	4,84	5,42
2/1	16,96	4,01	4,59	17,05	4,42	5,00	17,20	4,87	5,45
5/4	18,07	4,03	4,61	18,15	4,45	5,03	18,29	4,92	5,50
7/6	18,73	4,07	4,65	18,81	4,49	5,07	18,95	4,96	5,54
10/8,3	20,08	4,11	4,69	20,14	4,54	5,12	20,28	5,02	5,60
15/13,5	22,42	4,18	4,76	22,46	4,61	5,19	22,58	5,10	5,68
20/18,3	25,15	4,29	4,87	25,16	4,72	5,30	25,25	5,22	5,80

Te bs/bu \ Tu	50			55			60		
	PT	Pa	PaT	PT	Pa	PaT	PT	Pa	PaT
-20	9,95	4,63	5,21	10,23	5,09	5,67			
-15/-15,4	11,56	4,92	5,50	11,87	5,44	6,02	12,27	6,03	6,61
-10/-10,5	13,27	5,14	5,72	13,59	5,71	6,29	14,01	6,36	6,94
-5/-5,5	14,98	5,28	5,86	15,31	5,89	6,47	15,74	6,59	7,17
0/-0,6	16,81	5,39	5,97	17,14	6,04	6,62	17,57	6,77	7,35
2/1	17,43	5,44	6,02	17,76	6,10	6,68	18,19	6,84	7,42
5/4	18,52	5,49	6,07	18,84	6,17	6,75	19,28	6,93	7,51
7/6	19,18	5,55	6,13	19,51	6,24	6,82	19,95	7,02	7,60
10/8,3	20,50	5,63	6,21	20,83	6,33	6,91	21,26	7,14	7,72
15/13,5	22,78	5,72	6,30	23,09	6,45	7,03	23,52	7,27	7,85
20/18,3	25,44	5,86	6,44	25,73	6,61	7,19	26,15	7,46	8,04

PERFORMANTE DE INCALZIRE *HEATING PERFORMANCE*

HOTTY 081 T

Tu	35			40			45		
Te bs/bu	**PT**	**Pa**	**PaT**	**PT**	**Pa**	**PaT**	**PT**	**Pa**	**PaT**
-20	11,63	4,30	4,88	11,76	4,67	5,25	12,02	5,10	5,68
-15/-15,4	14,03	4,58	5,16	14,17	4,98	5,56	14,43	5,44	6,02
-10/-10,5	16,49	4,82	5,40	16,64	5,24	5,82	16,88	5,73	6,31
-5/-5,5	18,90	5,02	5,60	19,05	5,47	6,05	19,27	5,98	6,56
0/-0,6	21,47	5,20	5,78	21,62	5,68	6,26	21,83	6,22	6,80
2/1	22,33	5,26	5,84	22,48	5,75	6,33	22,69	6,31	6,89
5/4	23,85	5,35	5,93	24,01	5,86	6,44	24,22	6,44	7,02
7/6	24,78	5,42	6,00	24,94	5,95	6,53	25,14	6,55	7,13
10/8,3	26,64	5,52	6,10	26,81	6,08	6,66	27,01	6,71	7,29
15/13,5	29,93	5,65	6,23	30,10	6,26	6,84	30,29	6,93	7,51
20/18,3	33,84	5,80	6,38	34,02	6,47	7,05	34,19	7,21	7,79

Tu	50			55			60		
Te bs/bu	**PT**	**Pa**	**PaT**	**PT**	**Pa**	**PaT**	**PT**	**Pa**	**PaT**
-20	12,42	5,66	6,24	12,92	6,31	6,89			
-15/-15,4	14,80	6,02	6,60	15,26	6,71	7,29	15,78	7,49	8,07
-10/-10,5	17,21	6,34	6,92	17,62	7,07	7,65	18,07	7,88	8,46
-5/-5,5	19,58	6,63	7,21	19,93	7,38	7,96	20,32	8,23	8,81
0/-0,6	22,11	6,90	7,48	22,41	7,69	8,27	22,73	8,59	9,17
2/1	22,95	7,00	7,58	23,25	7,81	8,39	23,54	8,72	9,30
5/4	24,46	7,16	7,74	24,73	7,99	8,57	24,99	8,93	9,51
7/6	25,38	7,29	7,87	25,63	8,14	8,72	25,87	9,09	9,67
10/8,3	27,23	7,48	8,06	27,44	8,37	8,95	27,64	9,36	9,94
15/13,5	30,48	7,76	8,34	30,65	8,70	9,28	30,78	9,75	10,33
20/18,3	34,35	8,10	8,68	34,46	9,11	9,69	34,51	10,23	10,81

Valorile PT de incalzire se refera la conditii de operare cu bateria curatata, fara prezenta de gheat a. Altfel, pentru a calcula capacitatea de incalzire, este necesar sa se ia in calcul factorul de dezghetare prin aplicarea multiplicatorilor de mai jos:

The PT heat outputs refer to operating conditions with the finned coil clean without the presence of frost on the fin area. Otherwise for the calculation of the heating capacity is necessary to consider the factor "defrost" by applying the multipliers below:

Putere termica efectiva = *PT* * factorul *Ksb*

	Temp. ambientala B.S. / B.U. _ *Ambient temp. D.B / W.B.*						
	5/4	2/1	0/-0,6	-5/-5,5	-10 /-10,5	-15/-15,4	-20
Ksb factor dezghetare	0,93	0,85	0,88	0,9	0,92	0,95	0,95

Tu Temp. apa pe tur - *Leaving water temp.*
Te Temp. ambientala - *Ambient temperature*

PT Capacitate de incalzire - *Heating capacity*
Pa Putere absorbita compresor - *Compressor power input*
PaT Putere compresor + ventilatoare (exclus pompa) _ *Compressor + fans power input (pump excluded)*

PERFORMANTE DE RACIRE

COOLING PERFORMANCE

HOTTY 031 M

Te bs	25			30			35		
Tu	PF	Pa	PaT	PF	Pa	PaT	PF	Pa	PaT
4	7,53	2,11	2,43	7,36	2,30	2,62	7,21	2,51	2,83
5	7,72	2,18	2,50	7,54	2,37	2,69	7,34	2,59	2,91
6	7,79	2,23	2,55	7,61	2,43	2,75	7,40	2,65	2,97
7	7,95	2,28	2,60	7,76	2,49	2,81	7,63	2,72	3,04
8	8,10	2,32	2,64	7,94	2,53	2,85	7,75	2,76	3,08
9	8,31	2,33	2,65	8,17	2,55	2,87	8,00	2,79	3,11
10	8,50	2,35	2,67	8,30	2,57	2,89	8,12	2,81	3,13
11	8,76	2,38	2,70	8,55	2,60	2,92	8,37	2,85	3,17
15	9,66	2,42	2,74	9,49	2,65	2,97	9,29	2,91	3,23
18	10,99	2,48	2,80	10,87	2,73	3,05	10,73	3,01	3,33

Te bs	40			45		
Tu	PF	Pa	PaT	PF	Pa	PaT
4	7,03	2,74	3,06	6,89	3,01	3,33
5	7,12	2,83	3,15	6,90	3,11	3,43
6	7,21	2,91	3,23	6,98	3,19	3,51
7	7,43	2,98	3,30	7,17	3,28	3,60
8	7,54	3,03	3,35	7,35	3,34	3,66
9	7,81	3,07	3,39	7,59	3,38	3,70
10	7,88	3,09	3,41	7,65	3,40	3,72
11	8,15	3,13	3,45	7,94	3,46	3,78
15	9,07	3,21	3,53			
18	10,50	3,33	3,65			

HOTTY 041 M

Te bs	25			30			35		
Tu	PF	Pa	PaT	PF	Pa	PaT	PF	Pa	PaT
4	11,12	2,79	3,11	11,03	3,09	3,41	10,91	3,43	3,75
5	11,43	2,88	3,20	11,31	3,19	3,51	11,10	3,56	3,88
6	11,57	2,96	3,28	11,43	3,28	3,60	11,20	3,66	3,98
7	11,82	3,03	3,35	11,67	3,36	3,68	11,54	3,75	4,07
8	12,05	3,08	3,40	11,93	3,42	3,74	11,70	3,81	4,13
9	12,35	3,10	3,42	12,25	3,44	3,76	12,06	3,84	4,16
10	12,61	3,12	3,44	12,43	3,46	3,78	12,23	3,86	4,18
11	12,99	3,15	3,47	12,79	3,50	3,82	12,58	3,91	4,23
15	14,23	3,18	3,50	14,09	3,54	3,86	13,84	3,95	4,27
18	16,04	3,25	3,57	15,95	3,60	3,92	15,77	4,03	4,35

Te bs	40			45		
Tu	PF	Pa	PaT	PF	Pa	PaT
4	10,70	3,84	4,16	10,50	4,33	4,65
5	10,83	3,99	4,31	10,50	4,50	4,82
6	10,95	4,11	4,43	10,60	4,64	4,96
7	11,26	4,21	4,53	10,85	4,76	5,08
8	11,41	4,29	4,61	11,09	4,85	5,17
9	11,79	4,32	4,64	11,41	4,89	5,21
10	11,88	4,35	4,67	11,50	4,92	5,24
11	12,25	4,40	4,72	11,88	4,98	5,30
15	13,51	4,45	4,77			
18	15,42	4,54	4,86			

PERFORMANTE DE RACIRE

COOLING PERFORMANCE

HOTTY 041 T

Te bs	25			30			35		
Tu	PF	Pa	PaT	PF	Pa	PaT	PF	Pa	PaT
4	11,25 2,	63	2,95	11,13 2,	94	3,26	11,00 3,	29	3,61
5	11,55 2,	72	3,04	11,42 3,	05	3,37	11,20 3,	41	3,73
6	11,69 2,	80	3,12	11,54 3,	14	3,46	11,30 3,	51	3,83
7	11,94 2,	87	3,19	11,78 3,	22	3,54	11,64 3,	60	3,92
8	12,17 2,	92	3,24	12,03 3,	27	3,59	11,82 3,	66	3,98
9	12,47 2,	94	3,26	12,37 3,	29	3,61	12,18 3,	69	4,01
10	12,74 2,	96	3,28	12,55 3,	31	3,63	12,36 3,	71	4,03
11	13,11 2,	99	3,31	12,92 3,	35	3,67	12,72 3,	75	4,07
15	14,37 3,	01	3,33	14,24 3,	38	3,70	14,01 3,	78	4,10
18	16,21 3,	06	3,38	16,15 3,	43	3,75	16,01 3,	85	4,17

Te bs	40			45		
Tu	PF	Pa	PaT	PF	Pa	PaT
4	10,79 3,	69	4,01	10,61 4,	14	4,46
5	10,93 3,	83	4,15	10,62 4,	30	4,62
6	11,06 3,	94	4,26	10,73 4,	43	4,75
7	11,38 4,	04	4,36	11,00 4,	53	4,85
8	11,54 4,	11	4,43	11,26 4,	62	4,94
9	11,93 4,	14	4,46	11,60 4,	65	4,97
10	12,03 4,	16	4,48	11,69 4,	68	5,00
11	12,41 4,	21	4,53	12,09 4,	73	5,05
15	13,72 4,	25	4,57			
18	15,72 4,	33	4,65			

HOTTY 061 T

Te bs	25			30			35		
Tu	PF	Pa	PaT	PF	Pa	PaT	PF	Pa	PaT
4	15,92 3,	80	4,38	15,63 4,	20	4,78	15,40 4,	66	5,24
5	16,28 3,	92	4,50	15,99 4,	34	4,92	15,66 4,	83	5,41
6	16,43 4,	02	4,60	16,13 4,	45	5,03	15,80 4,	97	5,55
7	16,74 4,	11	4,69	16,45 4,	56	5,14	16,27 5,	08	5,66
8	17,03 4,	18	4,76	16,79 4,	63	5,21	16,51 5,	17	5,75
9	17,43 4,	20	4,78	17,24 4,	66	5,24	17,00 5,	20	5,78
10	17,78 4,	22	4,80	17,48 4,	69	5,27	17,24 5,	23	5,81
11	18,28 4,	27	4,85	17,97 4,	74	5,32	17,73 5,	29	5,87
15	19,94 4,	31	4,89	19,73 4,	78	5,36	19,47 5,	34	5,92
18	22,34 4,	40	4,98	22,24 4,	87	5,45	22,12 5,	44	6,02

Te bs	40			45		
Tu	PF	Pa	PaT	PF	Pa	PaT
4	15,12 5,	22	5,80	14,95 5,	87	6,45
5	15,33 5,	41	5,99	15,01 6,	10	6,68
6	15,52 5,	58	6,16	15,20 6,	29	6,87
7	15,98 5,	71	6,29	15,61 6,	45	7,03
8	16,22 5,	82	6,40	15,99 6,	58	7,16
9	16,75 5,	86	6,44	16,47 6,	63	7,21
10	16,89 5,	89	6,47	16,60 6,	66	7,24
11	17,42 5,	96	6,54			
15	19,20 6,	02	6,60			
18	21,89	6,13	6,71			

PERFORMANTE DE RACIRE *COOLING PERFORMANCE*

HOTTY 081 T

Te bs	25			30			35		
Tu	PF	Pa	PaT	PF	Pa	PaT	PF	Pa	PaT
4	20,96	5,09	5,67	20,69	5,61	6,19	20,46	6,21	6,79
5	21,49	5,26	5,84	21,21	5,81	6,39	20,83	6,44	7,02
6	21,72	5,39	5,97	21,43	5,97	6,55	21,03	6,64	7,22
7	22,17	5,53	6,11	21,87	6,12	6,70	21,67	6,82	7,40
8	22,59	5,62	6,20	22,36	6,24	6,82	21,99	6,95	7,53
9	23,15	5,66	6,24	22,98	6,30	6,88	22,67	7,02	7,60
10	23,64	5,70	6,28	23,32	6,34	6,92	23,00	7,08	7,66
11	24,35	5,77	6,35	24,01	6,43	7,01	23,68	7,18	7,76
15	26,70	5,84	6,42	26,50	6,54	7,12	26,13	7,33	7,91
18	30,20	5,94	6,52	30,17	6,70	7,28	30,00	7,58	8,16

Te bs	40			45		
Tu	PF	Pa	PaT	PF	Pa	PaT
4	20,11	6,92	7,50	19,79	7,75	8,33
5	20,38	7,19	7,77	19,83	8,05	8,63
6	20,61	7,42	8,00	20,02	8,31	8,89
7	21,22	7,63	8,21	20,52	8,56	9,14
8	21,52	7,79	8,37	20,99	8,76	9,34
9	22,25	7,88	8,46	21,62	8,86	9,44
10	22,43	7,93	8,51	21,79	8,92	9,50
11	23,15	8,07	8,65	22,54	9,09	9,67
15	25,62	8,26	8,84			
18	29,50	8,58	9,16			

Tu Temp. apa pe tur - *Leaving water temp.*
Te Temp. ambientala - *Ambient temperature*

PF Capacitate de racire - *Cooling capacity*
Pa Putere absorbita compresor - *Compressor power input*
PaT Putere compresor + ventilatoare (exclus pompa) _ *Compressor + fans power input (pump excluded)*

LIMITE DE FUNCTIONARE WORKING LIMITS

FUNCTIONARE PE TIMP DE IARNA - *WINTER WORKING*

Temperatura apa - *Water temperature*

		Min	Standard	Max
Temp. apa intrare *Inlet water temperature*	℃	20	**39**	53

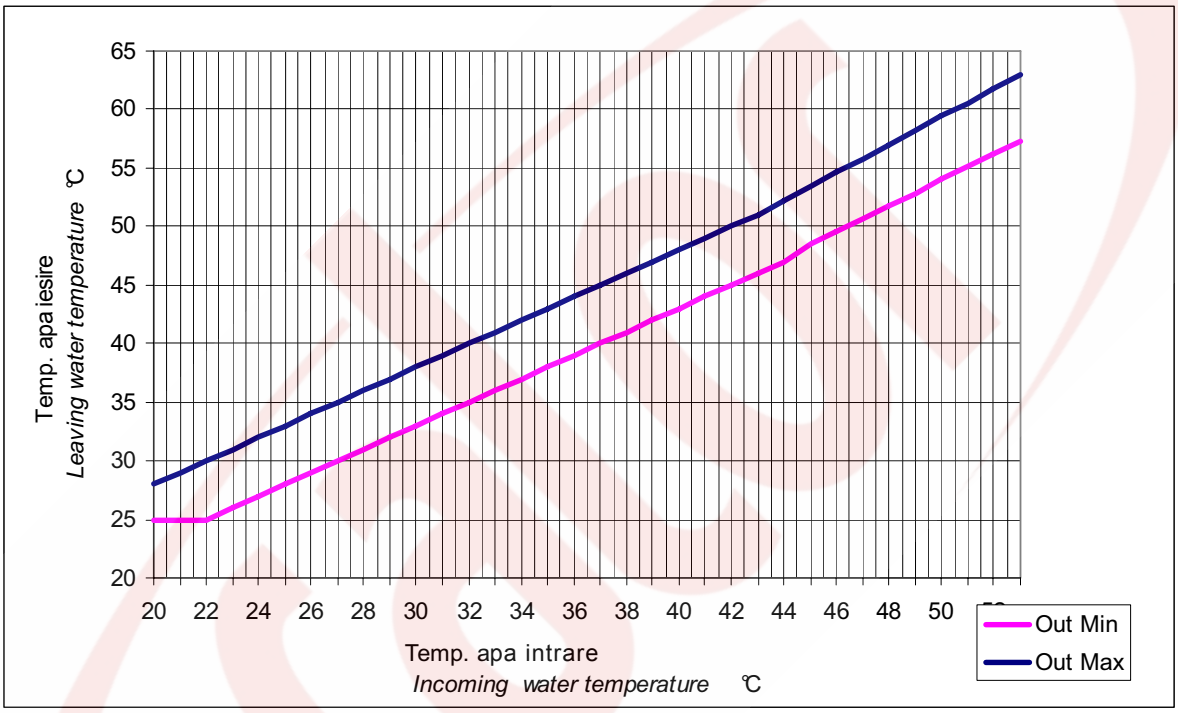

Temperatura ambientala - *Ambient temperature*

		Min	Max
Temperatura ambientala *Ambient temperature*	℃	-20	20

LIMITE DE FUNCTIONARE *WORKING LIMITS*

FUNCTIONARE PE TIMP DE VARA *SUMMER WORKING*

Temperatura apa - *Water temperature*

		Min	Standard	Max
Temp. apa intrare *Inlet water temperature*	℃9		**12**	23

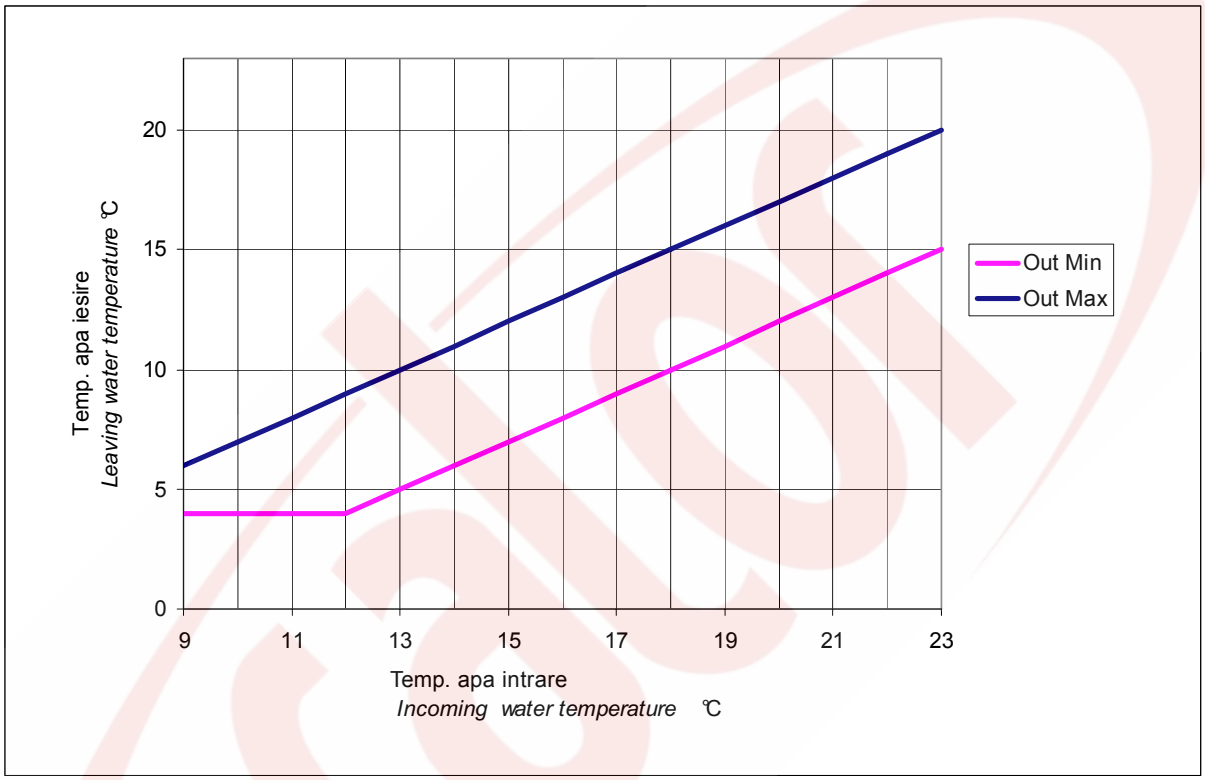

Temperatura ambientala - *Ambient temperature*

	Mi	n	Max
Temperatura ambientala *Ambient temperature*	℃ +	10	40

PIERDERI DE PRESIUNE SCHIMBATOR

BRAZED PLATE HEAT EXCH. PRESSURE DROPS

HOTTY 031MC

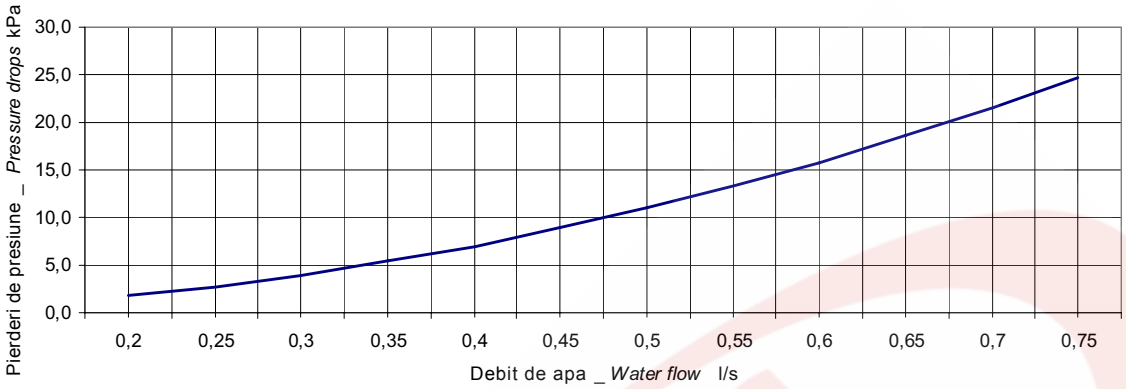

HOTTY 041MC - 041TC - 061TC

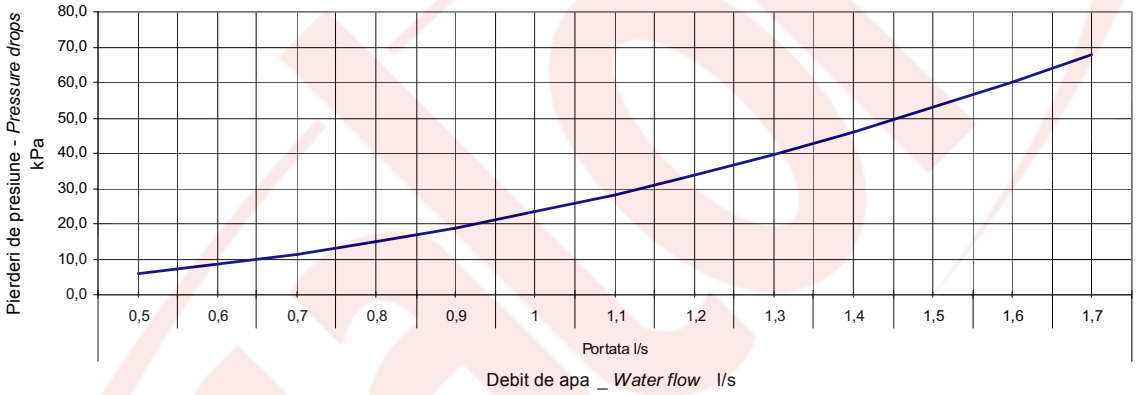

HOTTY 081TC

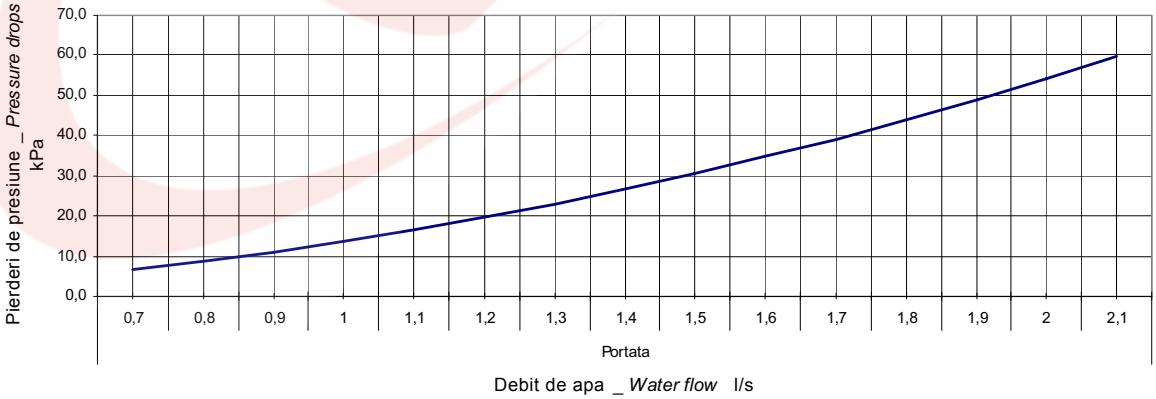

HOTTY 031

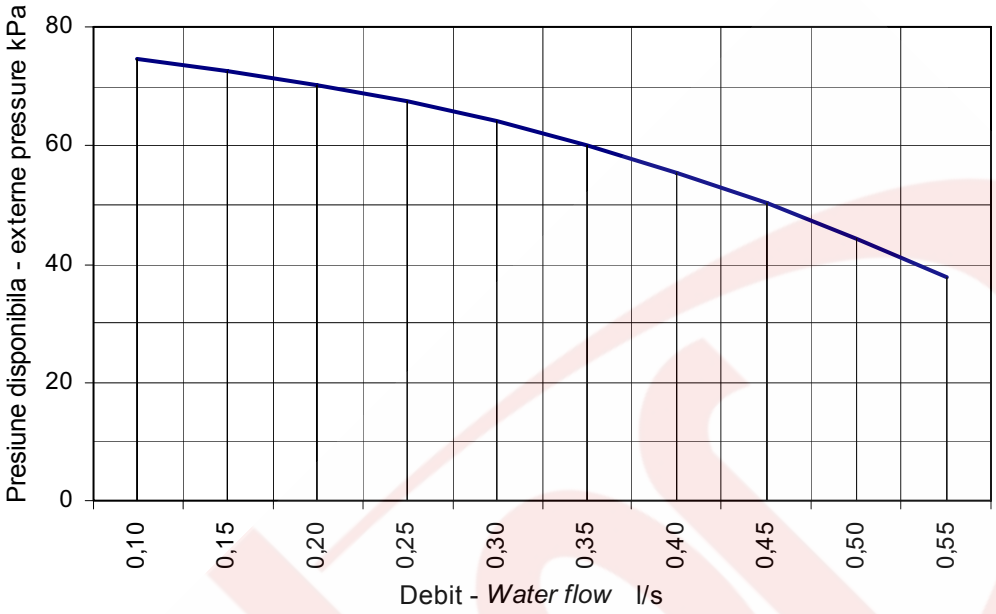

HOTTY 041MC - 041TC

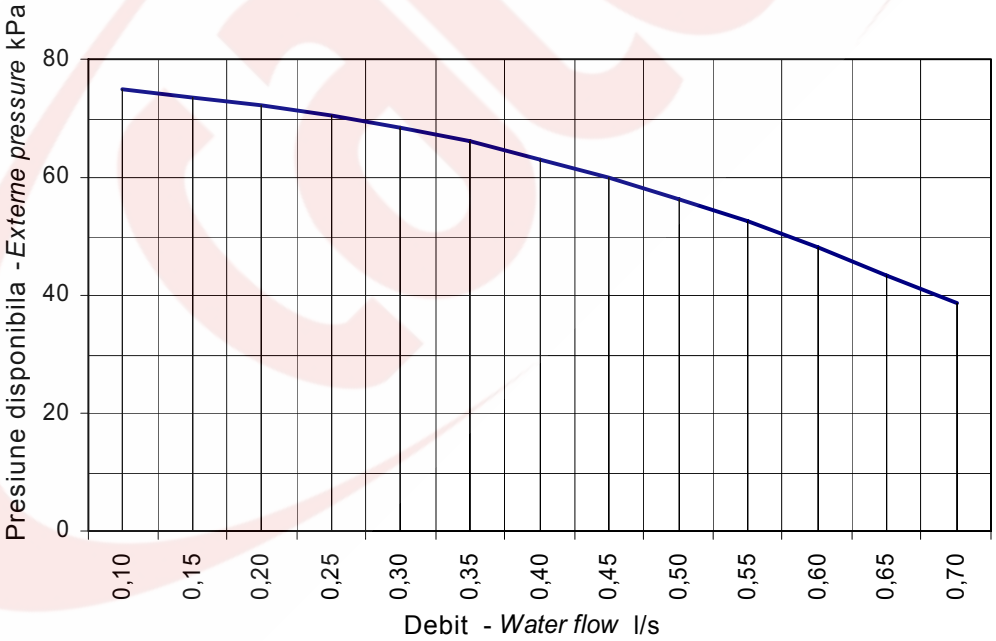

PERFORMANTE SECTIUNE HIDRONICA

HYDRONIC SECTION PERFORMANCE

HOTTY 061TC

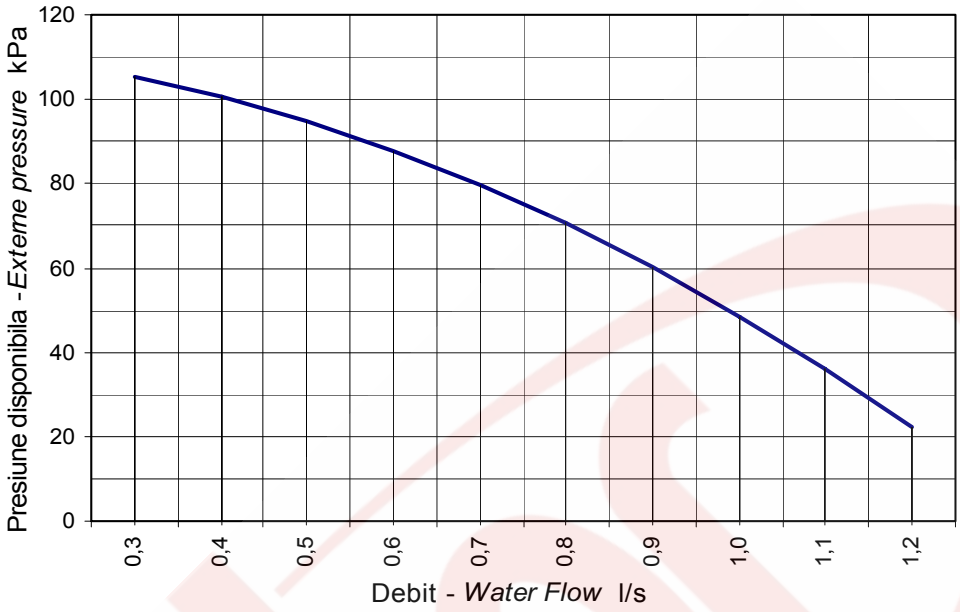

HOTTY 081TC

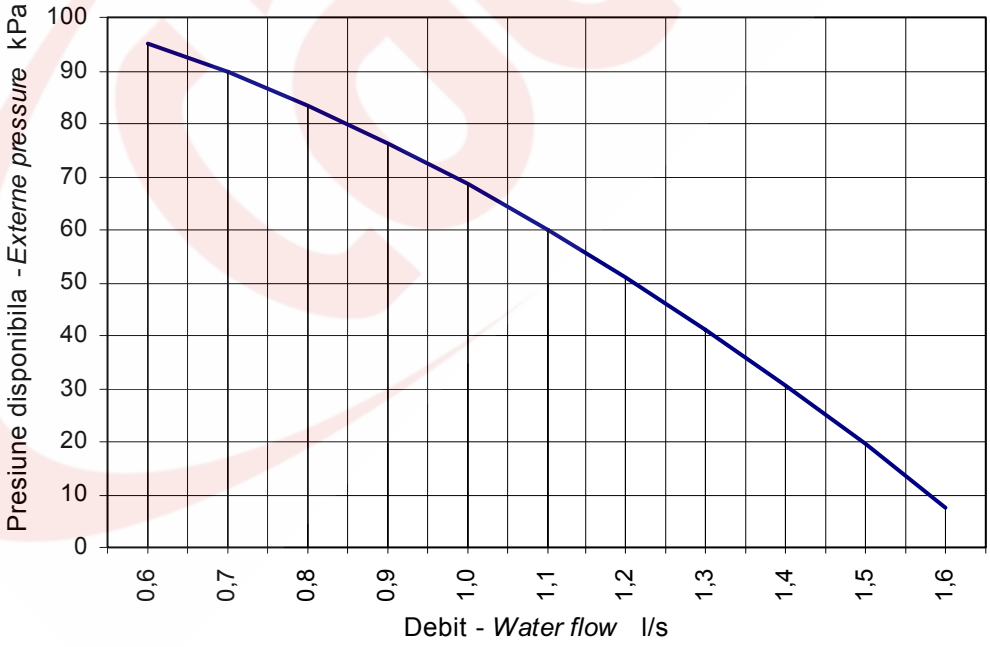

DIMENSIUNI SI RACORDURI APA

DIMENSIONS & WATER CONNECTIONS

MODEL: 031

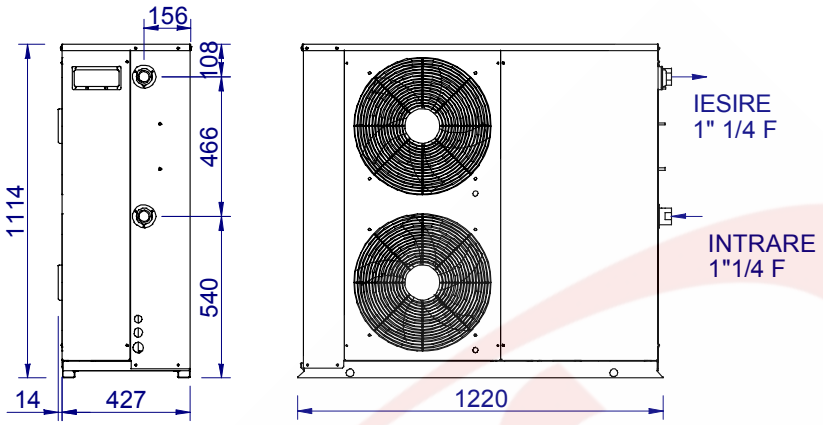

MODELE: 041 – 061

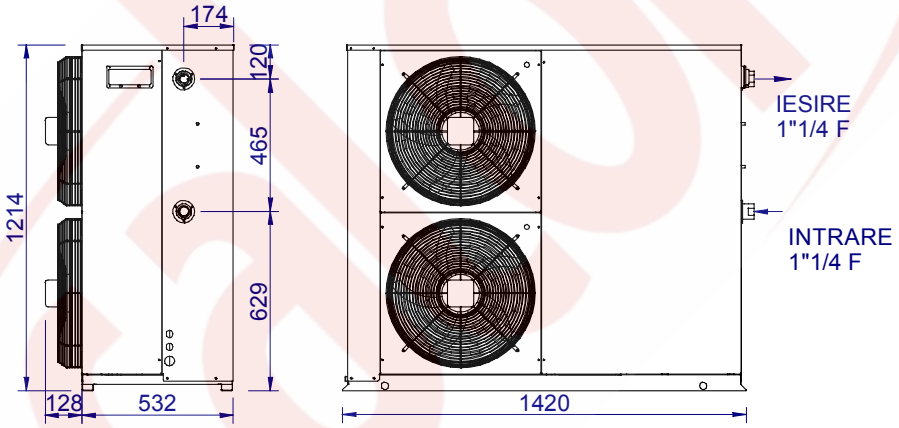

MODEL: 081

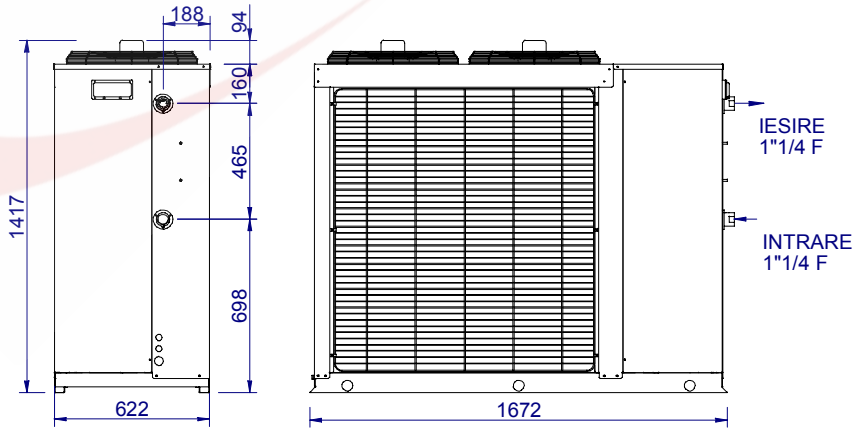

POZITII MONTARE AMORTIZOARE

ANTI VIBRATING MOUNTS POSITION

MODEL: 031

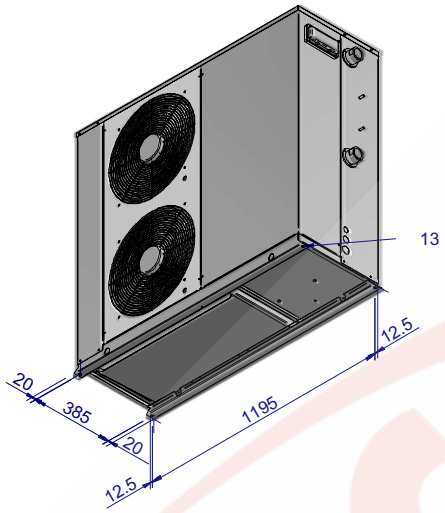

MODELE: 041 – 061

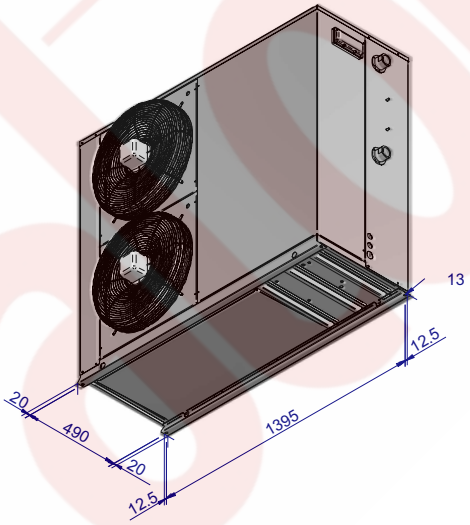

MODEL: 081

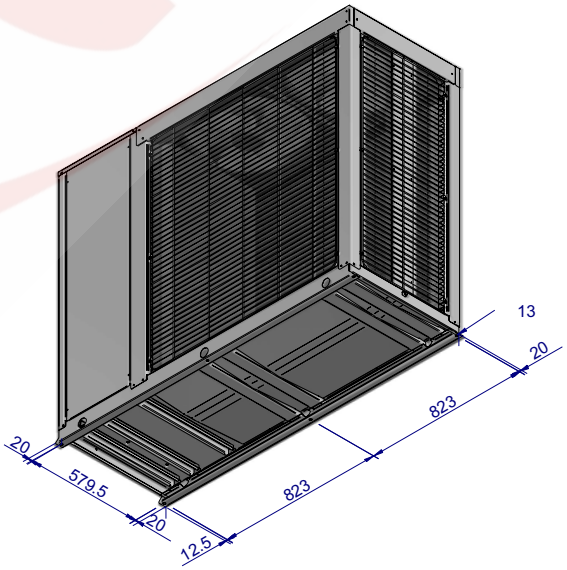

SPATII NECESARE PENTRU FUNCTIONARE

OPERATING SPACES

MODEL: 031

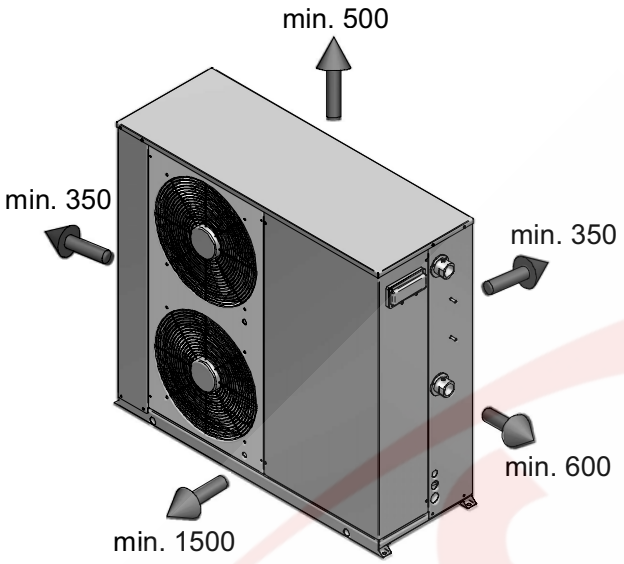

MODELE: 041 – 061

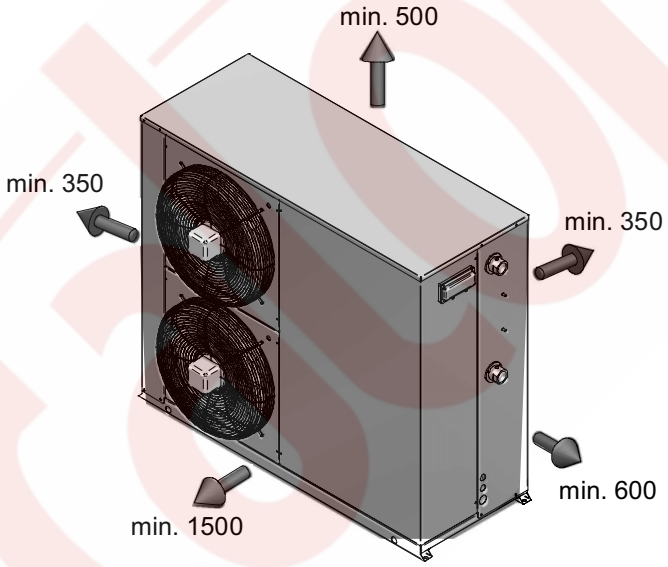

MODEL: 081

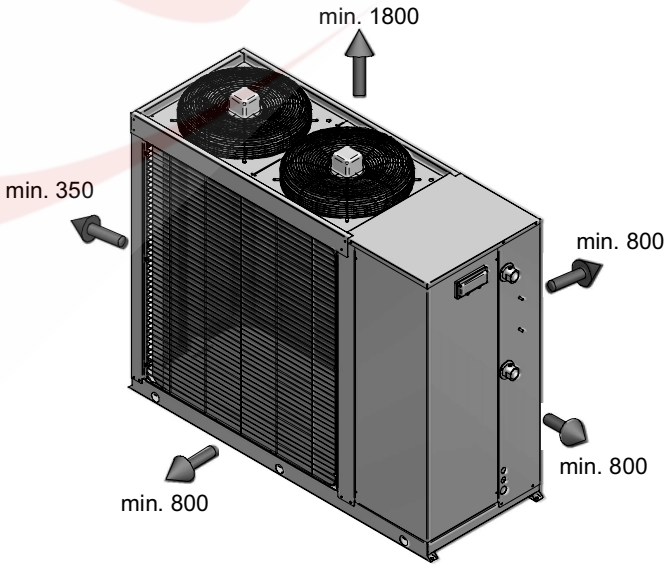

VAS DE ACUMULARE (OPTIONAL)

BUFFER TANK (OPTIONAL)

MODEL: 031

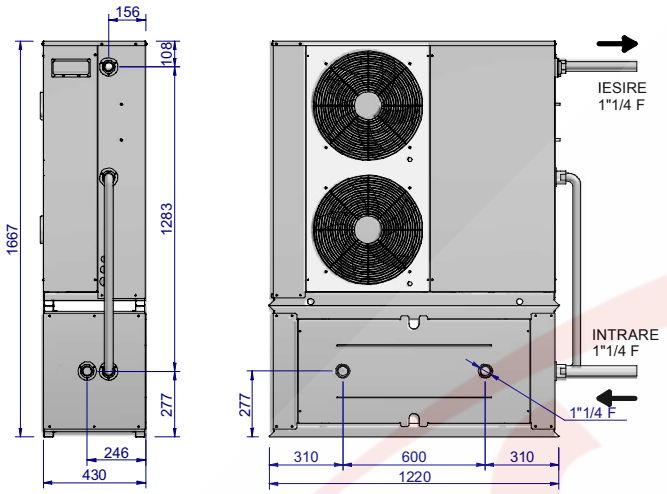

MODELE: 041 – 061

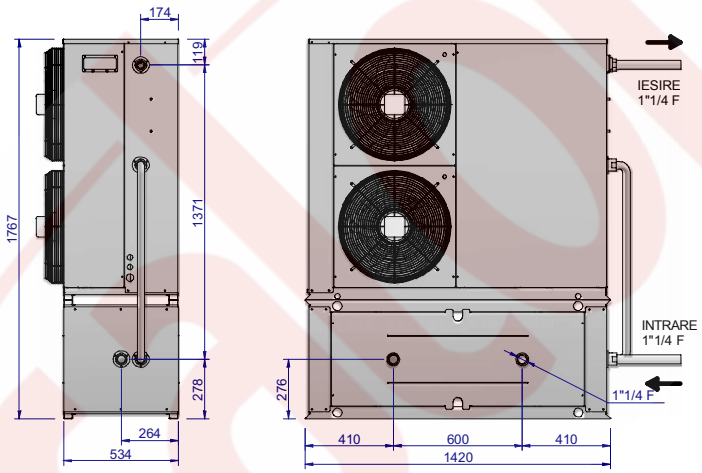

MODEL: 081

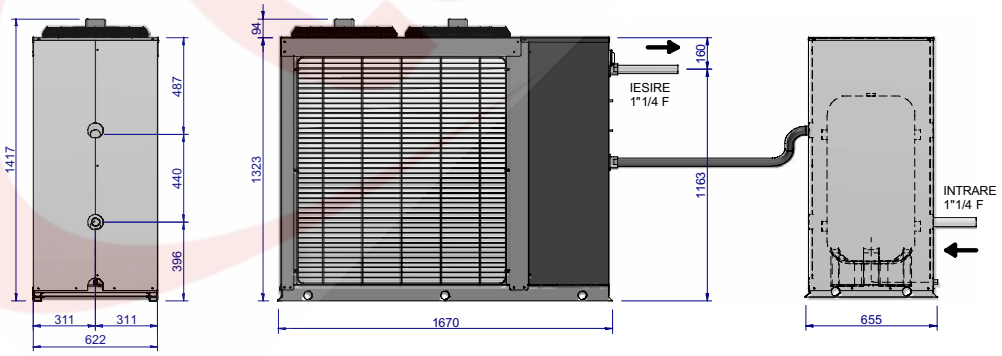

	MODEL				
	031 M	**041 M**	**041 T**	**061 T**	**081T**
LITRI / *LITRE*	70				100
COD / *CODE*	137KA070A	137KA070B			137KA100

ACCESORII OPTIONALE

OPTIONAL ACCESSORIES

PANOU DE CONTROL LA DISTANTA

REMOTE CONTROL PANEL

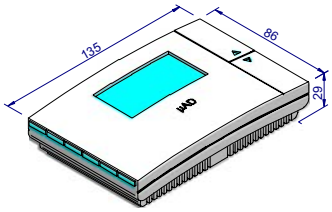

	MODEL				
	031 M	**041 M**	**041 T**	**061 T**	**081 T**
COD	137KRC050				

Panou de control la distanta (cu montare la interior) - se conecteaza la unitate prin placa de interfata deja cablata in panoul electric al pompei Hotty.
Permite urmatoarele functii:

- control ON / OFF al echipamentului
- comutare Vara / Iarna
- setari ore ale functionarii
- citire temperatura camerei
- citire ceas

Room control panel to be connected to the unit via serial interface card supplied already wired into the electrical panel of the unit Hotty.
It allows the following functions:

- *On / off control of equipment*
- *"Summer / Winter" switching*
- *Setting times of operation*
- *Reading of the room temperature*
- *Clock reading*

KIT SCHIMBATOR DE CALDURA / POMPA A.C.M (KSP)

D.H.W. PUMP / HEAT EXCHANGER KIT (KSP)

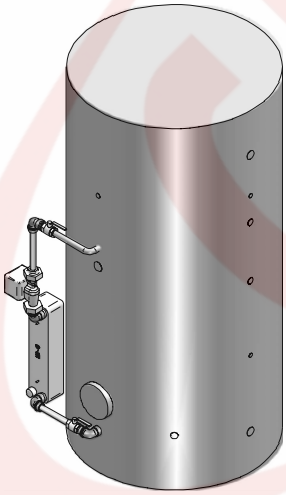

	MODEL				
	031 M	**041 M**	**041 T**	**061 T**	**081 T**
COD	137KSP100			137KSP110	

Kitul de transfer al caldurii apei calde menajere este echipat cu un schimbator de caldura in placi si circulator de apa cu corp din bronz si tevi de cupru.
Toate componentele kit-ului sunt corespunzatoare utilizarii pt ACM.
Scopul kit-ului este de a transfera temperatura furnizata de pompa de caldura catre vasul de apa calda menajera, realizand o eficienta maxima a schimbului de caldura cu o diferenta mica de temperatura intre cele doua medii.
Mai mult, schimbatorul de caldura permite o separare totala intre cele doua medii, evitand orice contact al apei calde menajere cu apa care circula in pompa de caldura.

The domestic water heat transfer kit is equipped with an brased stainless steel plate to plate exchanger and a water circulator with bronze body and copper piping. All the kit components are suitable for sanitary water use. The purpose of the kit is to transfer the heating energy coming from the heat pump desuperheater to the domestic water vessel allowing the max heat exchanging efficiency with a small temperature difference between the two mediums.
Furthermore the heat exchanger allows a total separation between the two medium, avoiding any contact of the sanitary water with the water flowing into the heat pump.

INCALZITOR ELECTRIC APA CALDA MENAJERA

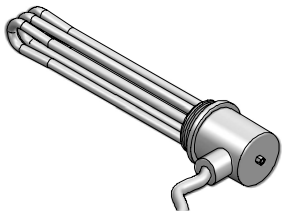

Rezistenta electrica cu imersie este fixata pe vas pentru integrarea incalzirii apei calde menajere.
Este completata de un termostat de siguranta si terminal pentru conectarea cutiei de control a pompei de caldura Hotty.

D.H.W. INTEGRATION EL. HEATER

	MODEL				
	031 M	**041 M**	**041 T**	**061 T**	**081 T**
Kw / V	3Kw / 230V 1ph			6Kw 400V 3ph	
COD	137KRI030 137K			RI060	

Immersion type electrical heater to be fitted on the vessel for heating integration of the domestic hot water.
Complete with high temperature safety thermostat and terminal for connecting to the Hotty control box.

KIT VANA CU 3 CAI

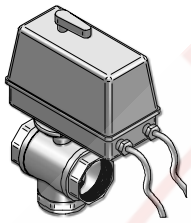

Kit-ul contine vana motorizata cu 3 cai pentru controlul apei calde menajere cu prioritate. Kit-ul poate fi livrat separat sau deja fixat pe vasul de apa calda menajera (daca este furnizat).
Vana cu 3 cai este comandata direct de catre controler-ul electronic al unitatii Hotty.

THREE WAY VALVE KIT

	MODEL				
	031 M	**041 M**	**041 T**	**061 T**	**081 T**
COD	137K3V000				

Motorized three-way valve kit to control the domestic hot water with logical priority over the plant. The kit can be supplied separately or already fitted on the DHW tank (If provided). The valve is directly drived by the electronic controller of the unit Hotty.

KIT SOFT STARTER COMPRESOR

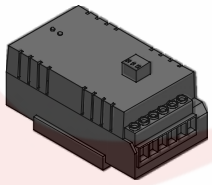

Dispozitiv electronic pentru a reduce nivelul curentului de pornire al compresorului pe unitati cu alimentare monofazica.
Limiteaza curentul maxim pana la 40 A.
Poate fi montat direct din fabrica sau poate fi livrat separat *pentru asamblare la locul montajului.*

COMPRESSOR SOFT STARTER KIT

	MODEL				
	031 M	**041 M**	**041 T**	**061 T**	**081 T**
COD	137SSC100		n.a.	n.a.	n.a.

Electronic device to reduce the inrush current of the compressor on units with single phase supply. It limits the maximum current up to 40 A.
It can be supplied factory installed or loose for assembly on site.

KIT ELECTRIC ANTIINGHET PENTRU TAVA DE COLECTARE CONDENS

DRAIN PANEL ANTIFREEZE EL. HEATING KIT

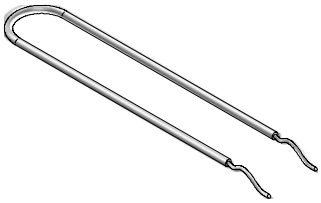

	MODEL				
	031 M	**041 M**	**041 T**	**061 T**	**081 T**
COD	137KRI120 137KR				I130

Previne formarea ghetii pe tava de colectare condens si posibilele blocaje ale conductei de scurgere in situatii de temperatura ambientala scazuta.
Kitul poate fi livrat asamblat numai din fabrica.

It prevents the ice forming on the condensation drain panel and possible obstruction of the drain connection pipe with low ambient temperature. The kit can be supplied factory assembly only.

SUPORTI ANTIVIBRANTI

VIBRATION DAMPENING SUPPORT FEETS

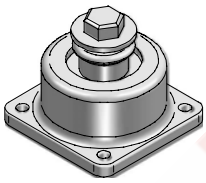

	MODEL				
	031 M	**041M**	**041T**	**061T**	**081 T**
COD	137SAB000	137SAB010 137SAB040			

Este necesar pentru a evita transmiterea vibratiilor catre structura de sustinere a echipamentului.
Este realizat din aliaj de aluminiu, cu amortizare pentru o durata mai mare de viata.

Necessary to avoid transmission of vibrations to the support structure of the equipment. Made of aluminum alloy material with elastomer damping _ long-lasting.

MANOMETRE CIRCUIT REFRIGERENT

REFRIGERANT PRESSURE GAUGES

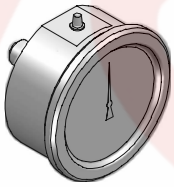

	MODEL				
	031 M	**041 M**	**041 T**	**061 T**	**081 T**
COD	137MHL000				

Permit citirea presiunii / temperaturii refrigerentului pe partile cu presiune ridicata si joasa.

They allow the reading the the refrigerant pressure / temperature on high and low pressure side.

FILTRU DE APA

WATER STRAINER

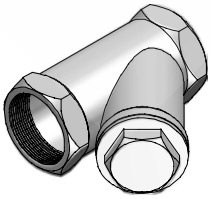

	MODEL				
	031 M	**041 M**	**041 T**	**061 T**	**081 T**
COD	137KFR000				

Vor fi montate pe conducta de intrare, prevenind posibilele obstructii ale schimbatorului de caldura
Kit-ul este furnizat separat pentru montare pe loc.

To be fitted on the user plant inlet pipe to the unit, it prevents the possibility of obstruction of the heat exchanger. The kit is supplied separately for assembly on site.

KIT CONECTARE REZERVOR LA CONDUCTE

BUFFER VESSEL PIPING CONNECTION KIT

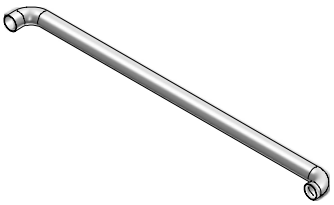

	MODEL				
	031 M	**041M**	**041T**	**061T**	**081 T**
COD	137KAT010	137KAT020			n.a.

Conexiuni preasamblate pentru conducte intre baza si accesorii 137KA... (rezervor).

Preassembled pipe hydraulic connection between the base unit and the accessory 137KA .... (Buffer tank).

SCHEMA DE PRINCIPIU A CONECTARII HIDRAULICE
Modele HOTTY 031MC – 041MC – 041TC

*WATER PIPING DIAGRAM _PRINCIPLE_*
Models HOTTY 031MC – 041MC – 041TC

VERSIUNI CU VAS APA CALDA MENAJERA TIP A.I.C.S.

VERSION WITH D.H.W. VESSEL MODEL A.I.C.S.

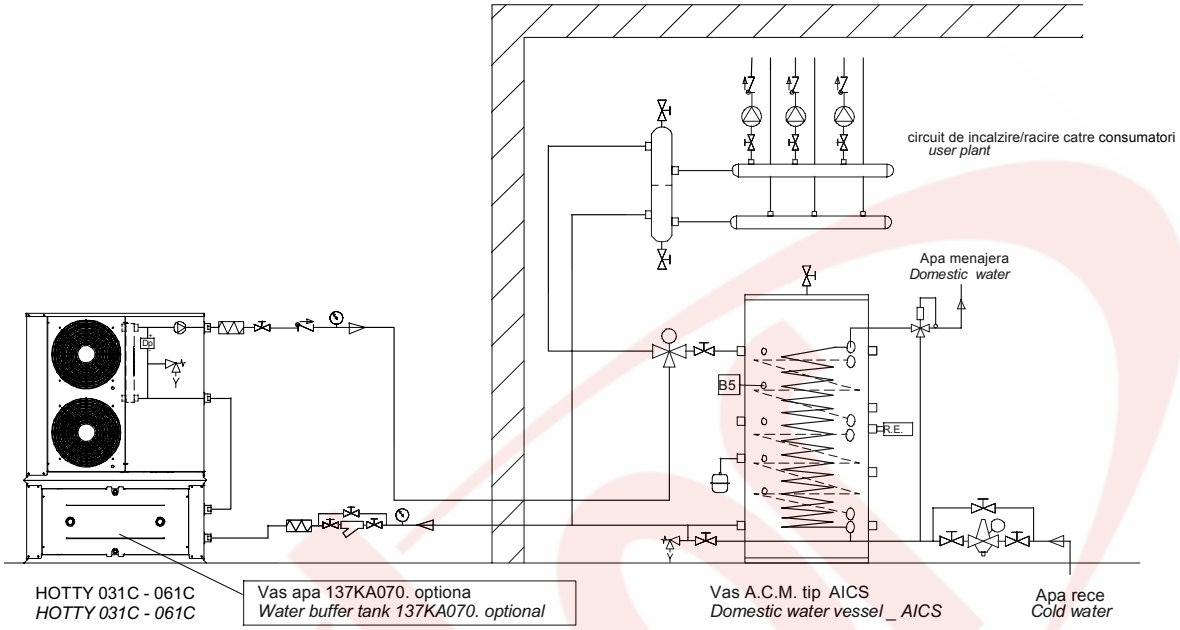

VERSIUNI CU VAS APA CALDA MENAJERA TIP BAVF

VERSION WITH D.H.W. VESSEL MODEL BAVF

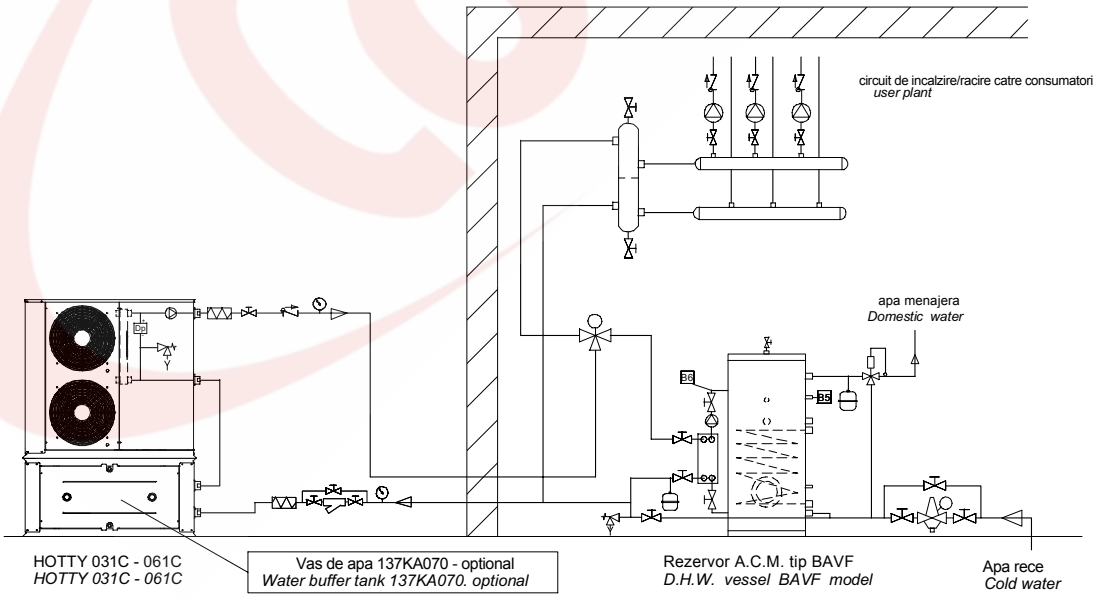

SCHEMA DE PRINCIPIU A CONECTARII HIDRAULICE
Model HOTTY 081TC

*WATER PIPING DIAGRAM _PRINCIPLE_*
Models HOTTY 081TC

VERSIUNI CU VAS APA CALDA MENAJERA TIP A.I.C.S

VERSION WITH D.H.W. VESSEL MODEL A.I.C.S.

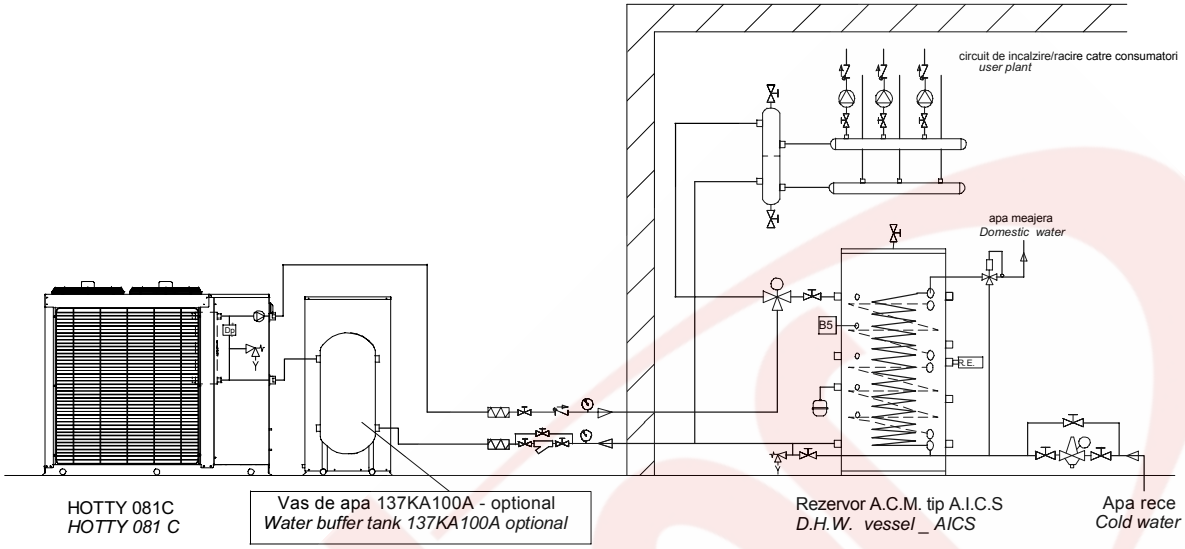

VERSIUNI CU VAS APA CALDA MENAJERA TIP BAVF

VERSION WITH D.H.W. VESSEL MODEL BAVF

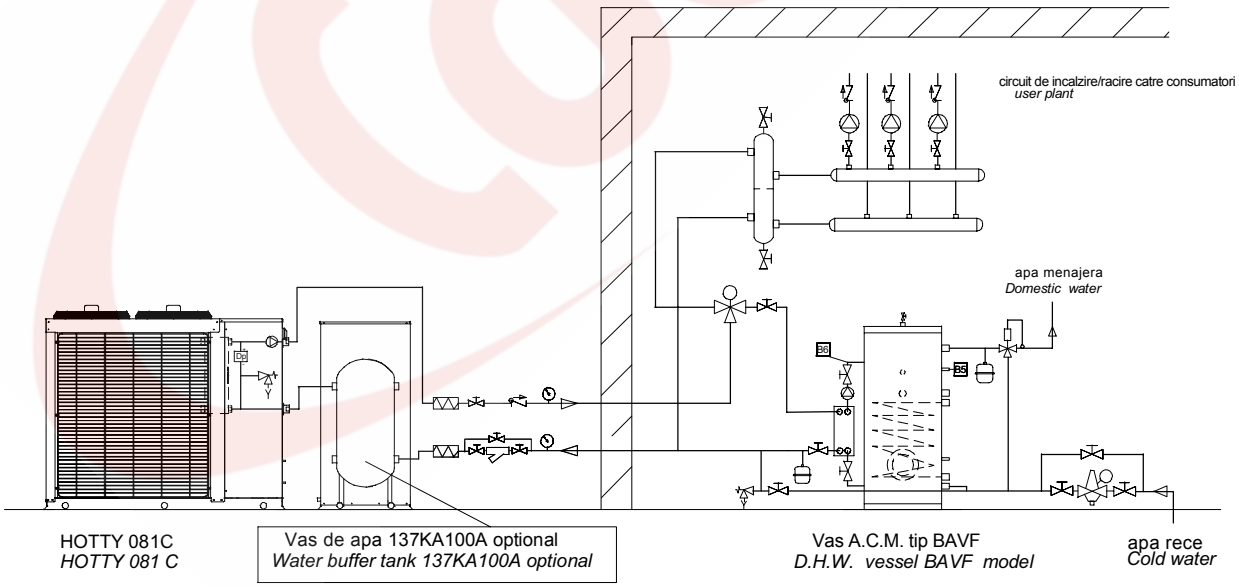

CARTE TEHNICA POMPE DE CALDURA HOTTY