R2T - R4T

R2T - R4T CIRCULATING PUMPS

Mechanically sealed circulation pumps are suitable for the circulation of hot and cold water in heating and air-conditioning systems. The type of design: external motor, mechanical seal and inline flanged connections, is the alternative type of design and completes the wet rotor circulation pumps (R2C - R4C series).

Applications

- Heating and air-conditioning systems
- Water supply systems
- Booster systems
- Agriculture and fruit and vegetable crops

Motor

- Squirrel cage asynchronous three phase with enclosed stator, externally ventilated, 2 pole (R2T) or 4 pole (R4T)
- Class F insulation
- Level of protection IP54
- Design V 18
- Power supply voltage: three phase
- Direction of rotation: anticlockwise (motor end view)

Usage limitations

- Non-aggressive and non-explosive clean liquids free of suspended solid particles and fibres
- Hot water or coolants not containing mineral oils
- Liquid temperature: from -20° C to +130° C
- Maximum operating pressure: 10 bar
- Maximum environmental temperature: 50° C
- The pump may be installed with the driving shaft in all positions between horizontal and vertical
- Flanged ports:
  DN 40-50-65 PN 6/10
  DN 80-100 PN 6
  DN 80-100 PN 10

DESIGN FEATURES

Component	Material
Pump casing	EN-GJL 200 (ex G20) cast iron
Impeller	X5 CrNi 1810 (Aisi 304) stainless steel
Shaft	X CrNiMo 17-12-03 (AISI 316) stainless steel
Mechanical seal	Graphite primary ring, tungsten carbide secondary ring
O-Ring	EPDM

Performance range

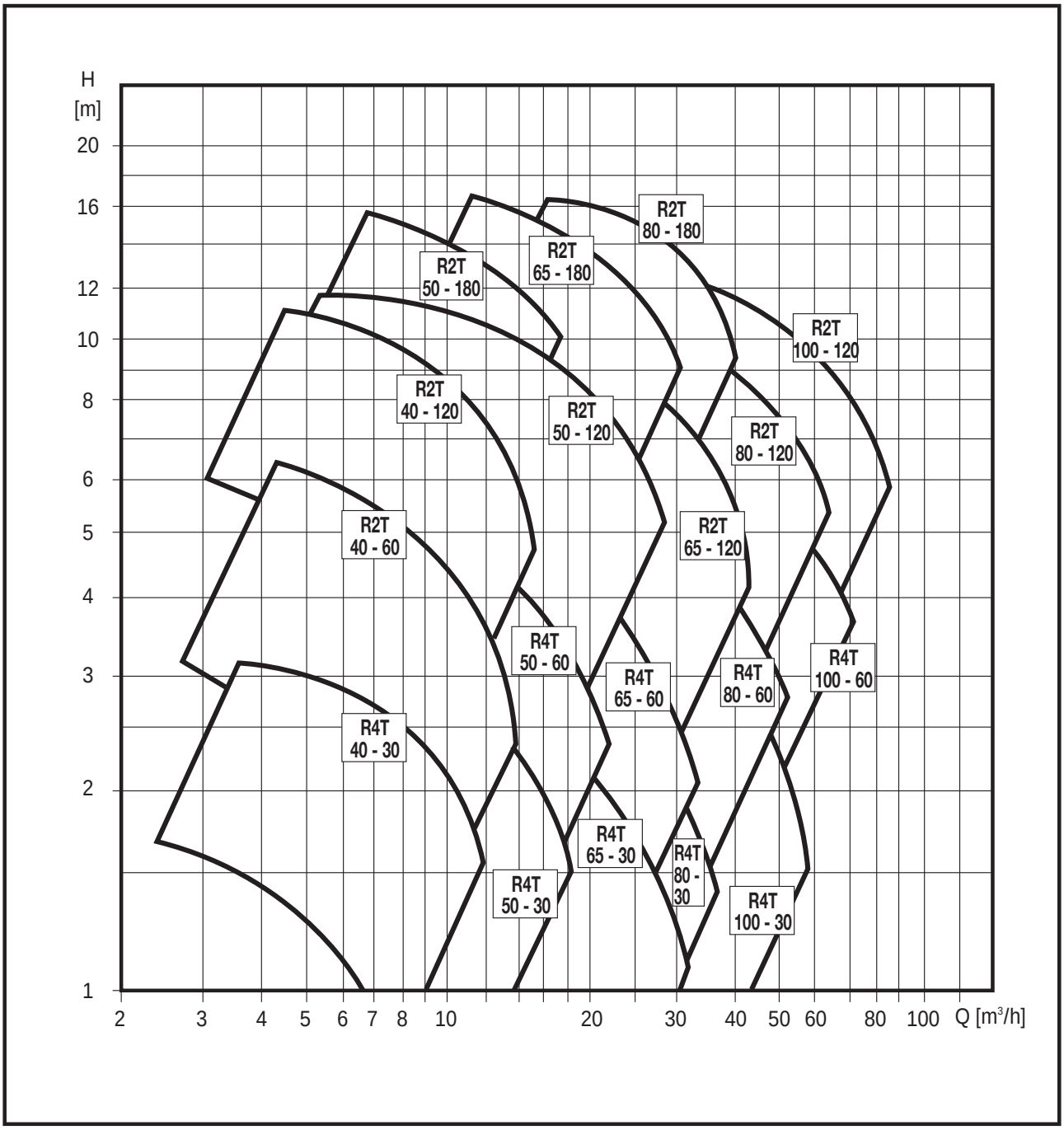

TABELLA DELLE PRESTAZIONI

CODE	MODEL	PN (bar)	Motor power (Kw)	Amp. 1x230V	Amp. 3x400V	Amp. 3x230V	Cond (µF.)	n (giri/min)	I_a / I_n (%)	Q L/1'	0	25	50	100	150	200	250
										Q m³/h	0	1,5	3	6	9	12	15
B2002111	R4T 40 - 30	6/10	0,25	2,5			10	1290	2,4	Discharge head in meters	3,3	3,2	3,1	2,8	2,4	1,7	
B2001011					1,10	1,90		1380	4,6								
B2002115	R2T 40 - 60	6/10	0,37	2,8			16	2720	4,5		6,7	6,5	6,2	5,4	4,2	2,6	1
B2001015					1,00	1,73		2840	4,1								
B2002117	R2T 40 - 120	6/10	0,55	4,2			16	2740	2,8		12,0	11,8	11,4	10,5	9,2	7,4	5,3
B2001017					1,45	2,50		2810	5,2								

Counterflanges not included

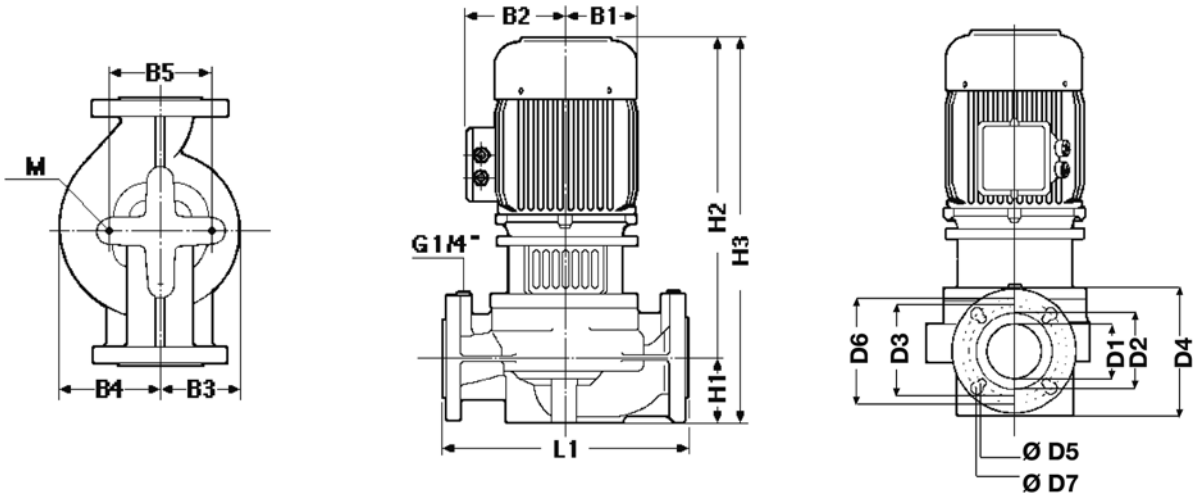

DIMENSIONS AND WEIGHTS

Model	D1	D2	D3	D4	ØD5	n°D5	D6	ØD7	n°D7	H1	H2	H3	L1	B1	B2	B3	B4	B5	M	Weight (Kg) net	Weight (Kg) gross	Packing volume (m³)
R4T 40 - 30	42	80	100	150	14	4	110	19	4	67	343	410	250	70	101	75	90	96	M12	20	22	0,039
R2T 40 - 60	42	80	100	150	14	4	110	19	4	67	343	410	250	70	101	75	90	96	M12	20	22	0,039
R2T 40 - 120	42	80	100	150	14	4	110	19	4	67	343	410	250	70	101	75	90	96	M12	20	22	0,039

TABLE OF HYDRAULIC PERFORMANCE

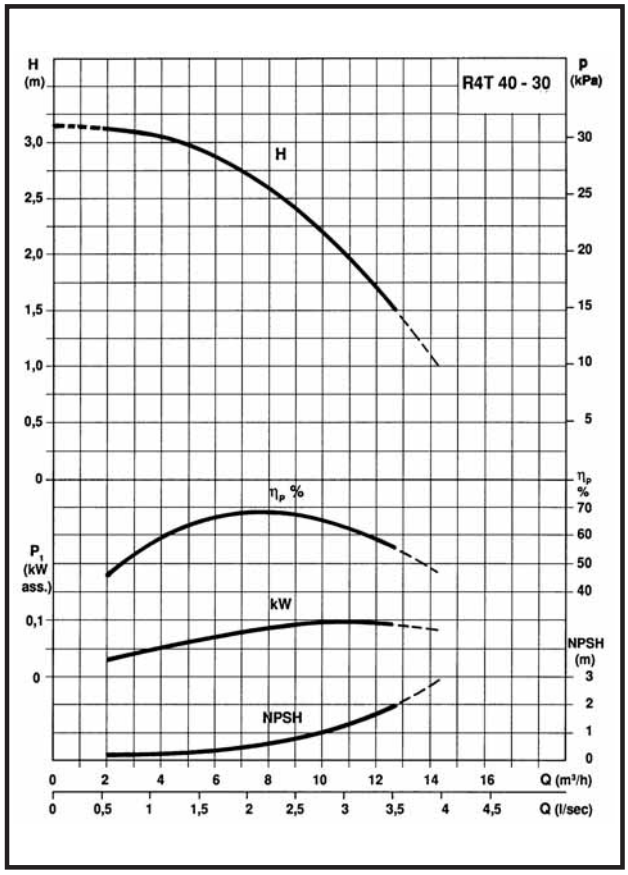

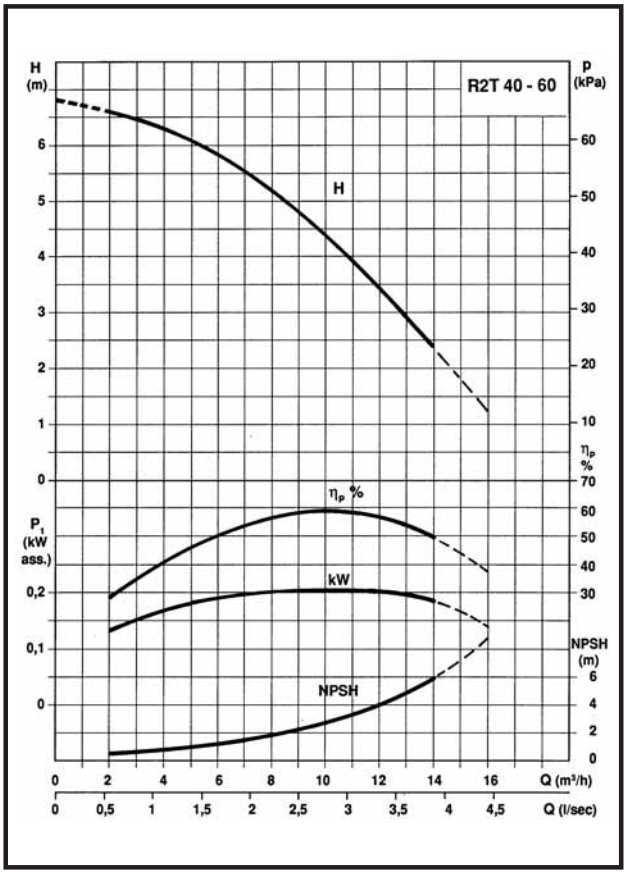

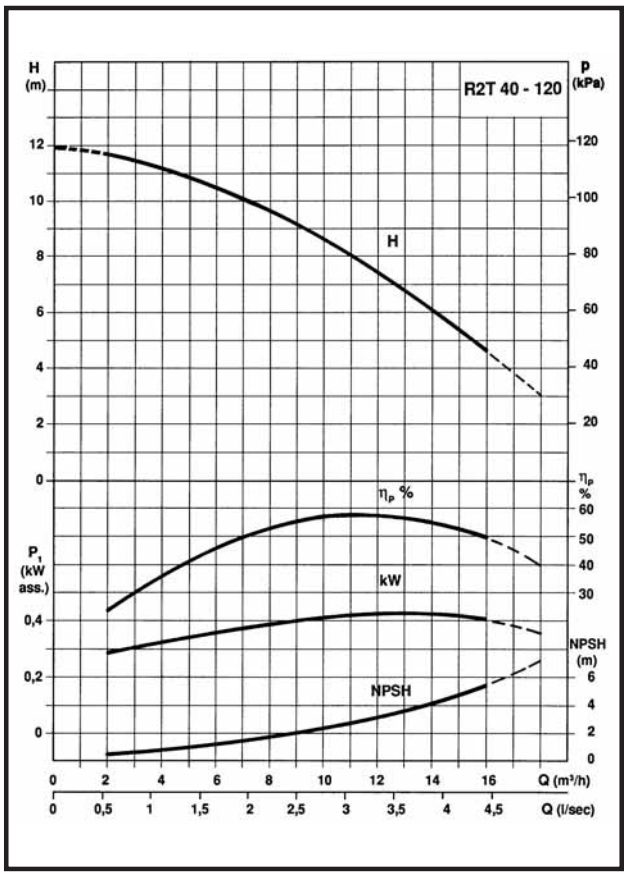

PUMP PERFORMANCE

CODE	MODEL	PN (bar)	Motor power (Kw)	Amp. 1x230V	Amp. 3x400V	Amp. 3x230V	Cond (µF.)	n (min⁻¹)	I_a / I_n (%)	Q L/1'	0	50	100	200	300	400	500
										m³/h	0	3	6	12	18	24	30
B2002121	R4T 50 - 30	6/10	0,25	2,5			10	1290	2,4	Discharge head in meters	3,1	3	2,9	2,5	1,5		
B2001021					1,10	1,90		1380	4,6								
B2002123	R4T 50 - 60	6/10	0,37	2,8			20	1370	3,7		5,9	5,7	5,4	4,5	3,3	1,4	
B2001023					1,25	2,15		1390	4,2								
B2002127	R2T 50 - 120	6/10	0,75	5			25	2800	2,9		12,0	11,9	11,6	10,5	8,4	5,8	2,8
B2001027					1,9	3,3		2810	4,5								
B2001025	R2T 50 - 180	6/10	1,1		2,60	4,50		2860	5,2		17,5	16,5	15,7	13,3	10,2	6,0	1,2

Counterflanges not included

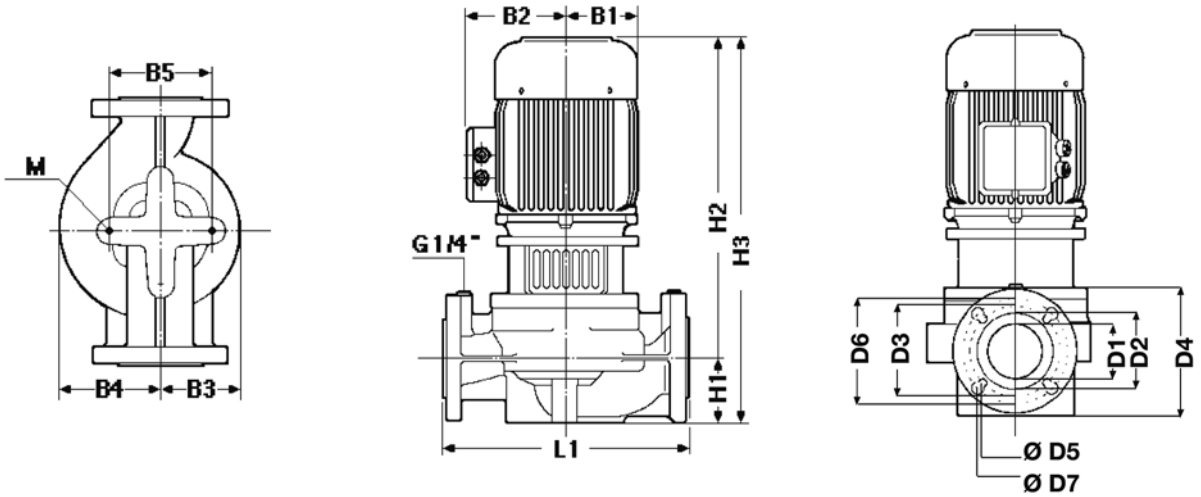

DIMENSIONS AND WEIGHTS

Model	Dimensions mm. D1	D2	D3	D4	ØD5	n°D5	D6	ØD7	n°D7	H1	H2	H3	L1	B1	B2	B3	B4	B5	M	Weight (Kg) net	gross	Packing volume (m³)
R4T 50 - 30	50	90	110	165	14	4	125	19	4	75	337	412	280	70	101	75	102	96	M12	23	25	0,039
R4T 50 - 60	50	90	110	165	14	4	125	19	4	75	337	412	280	70	101	101	102	96	M12	24	26	0,039
R2T 50 - 120	50	90	110	165	14	4	125	19	4	75	337	412	280	80	115	101	102	96	M12	26	29	0,073
R2T 50 - 180	50	90	110	165	14	4	125	19	4	75	337	412	280	80	115	101	102	96	M12	28	31	0,073

TABLE OF HYDRAULIC PERFORMANCE

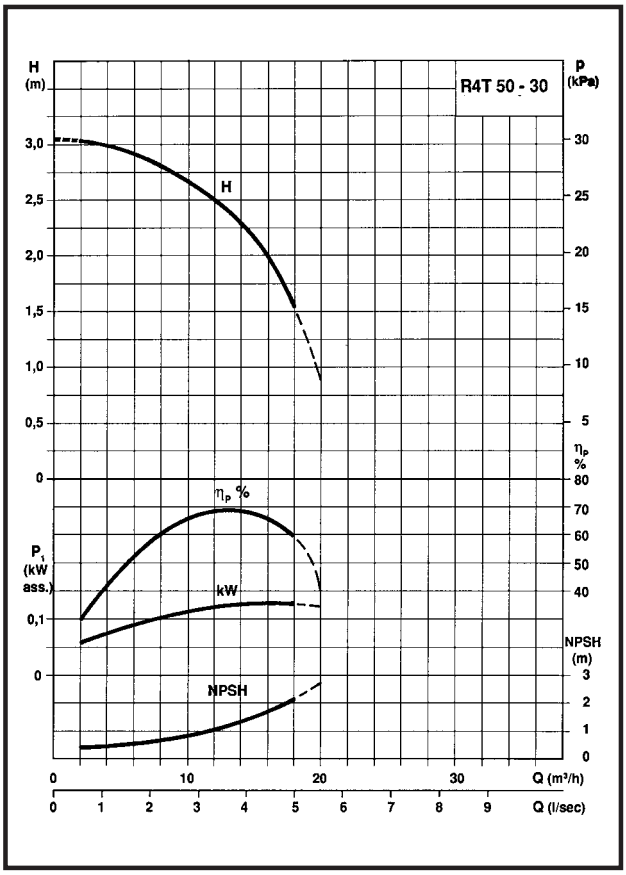

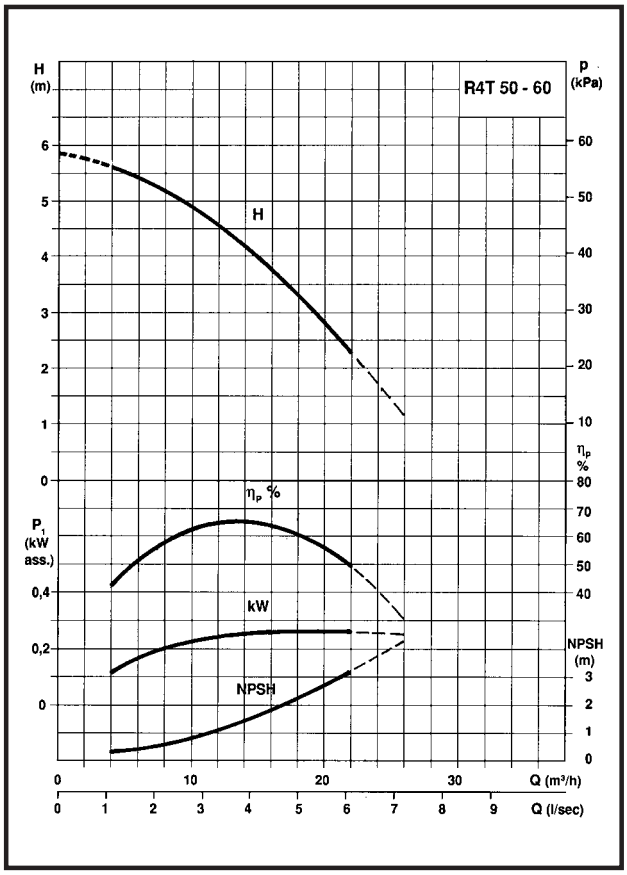

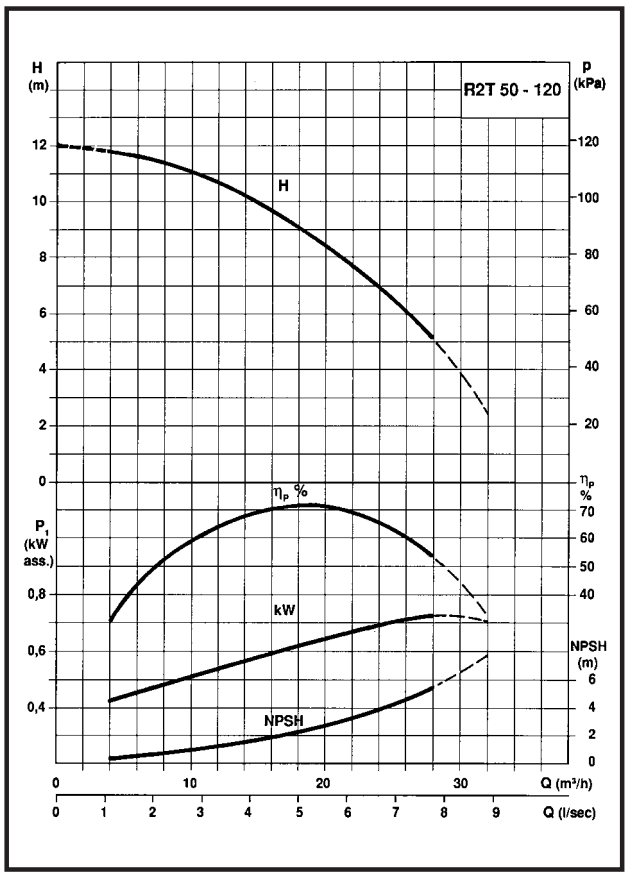

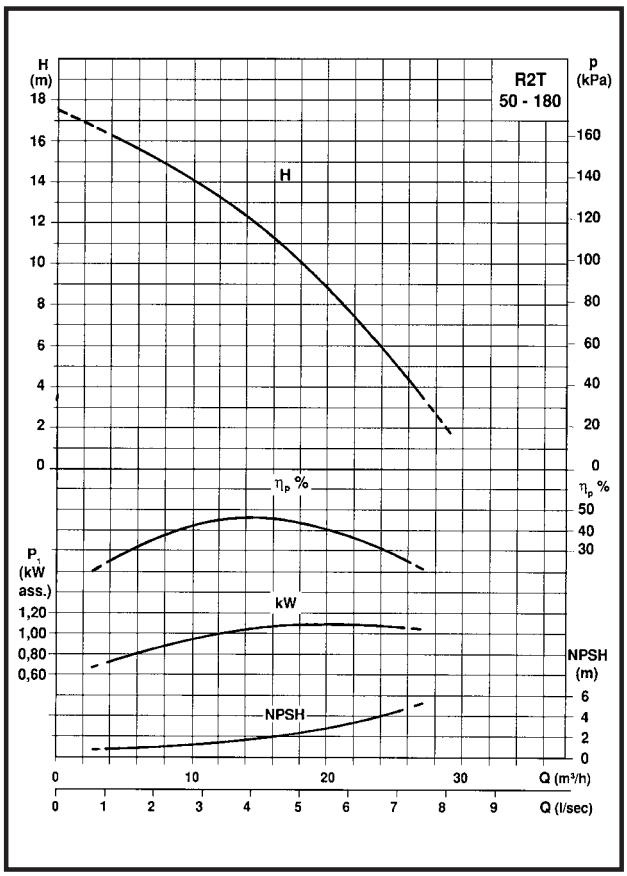

TABELLA DELLE PRESTAZIONI

CODE	MODEL	PN (bar)	Motor power (Kw)	Amp. 1x230V	Amp. 3x400V	Amp. 3x230V	Cond (µF.)	n (min⁻¹)	I_a / I_n (%)	Q L/1'	0	100	200	300	400	500	700
										m³/h	0	6	12	18	24	30	42
B2002131	R4T 65 - 30	6/10	0,25	2,5			10	1290	2,4	Discharge head in meters	3,2	3	2,7	2,3	1,8	1,2	
B2001031					1,10	1,90		1380	4,6								
B2002133	R4T 65 - 60	6/10	0,37	2,8			20	1370	3,7		5,5	5,4	4,9	4,4	3,6	2,7	
B2001033					1,25	2,15		1390	4,2								
B2002137	R2T 65 - 120	6/10	1,1	6,2			36	2730	5,4		11,3	11,0	10,4	9,9	9,0	7,8	4,2
B2001037					2,5	4,3		2840	5,8								
B2001035	R2T 65 - 180	6/10	1,5		3,40	5,90		2870	6,0		17,5	16,8	15,7	13,8	10,8	6,7	

Counterflanges not included

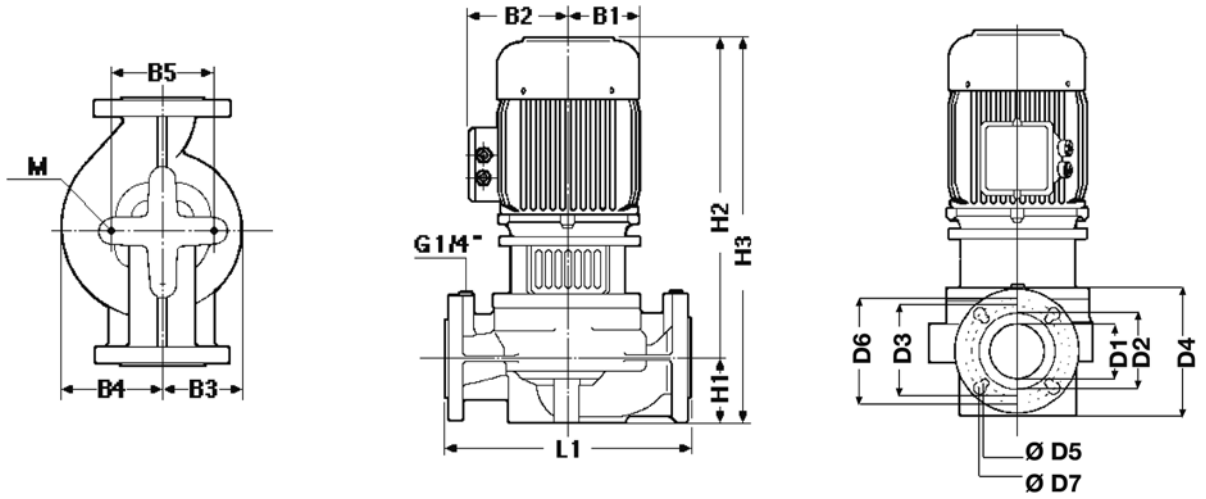

DIMENSIONS AND WEIGHTS

Model	D1	D2	D3	D4	ØD5	n°D5	D6	ØD7	n°D7	H1	H2	H3	L1	B1	B2	B3	B4	B5	M	Weight (Kg) net	Weight (Kg) gross	Packing volume (m³)
R4T 65 - 30	65	110	130	185	14	4	145	19	4	82	347	429	340	70	101	75	124	96	M12	26	29	0,073
R4T 65 - 60	65	110	130	185	14	4	145	19	4	82	347	429	340	80	101	75	124	96	M12	29	32	0,073
R2T 65 - 120	65	110	130	185	14	4	145	19	4	82	382	464	340	80	115	101	124	96	M12	33	36	0,073
R2T 65 - 180	65	110	130	185	14	4	145	19	4	82	401	483	340	90	115	101	124	96	M12	36	39	0,073

TABLE OF HYDRAULIC PERFORMANCE

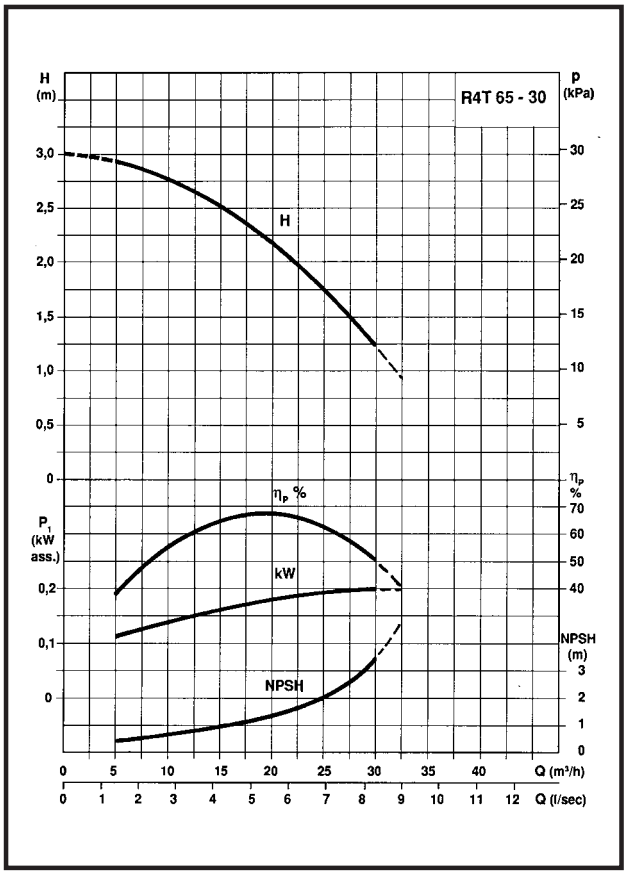

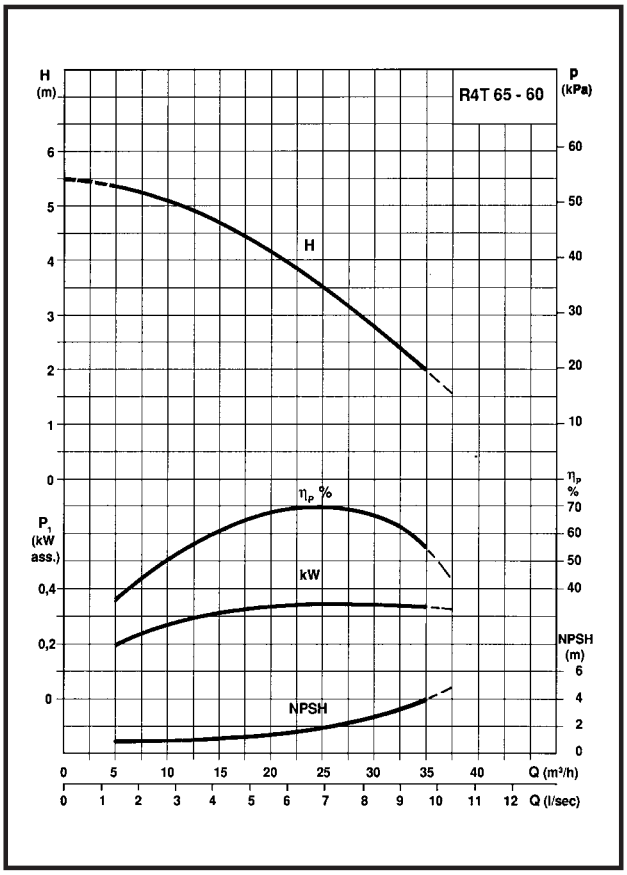

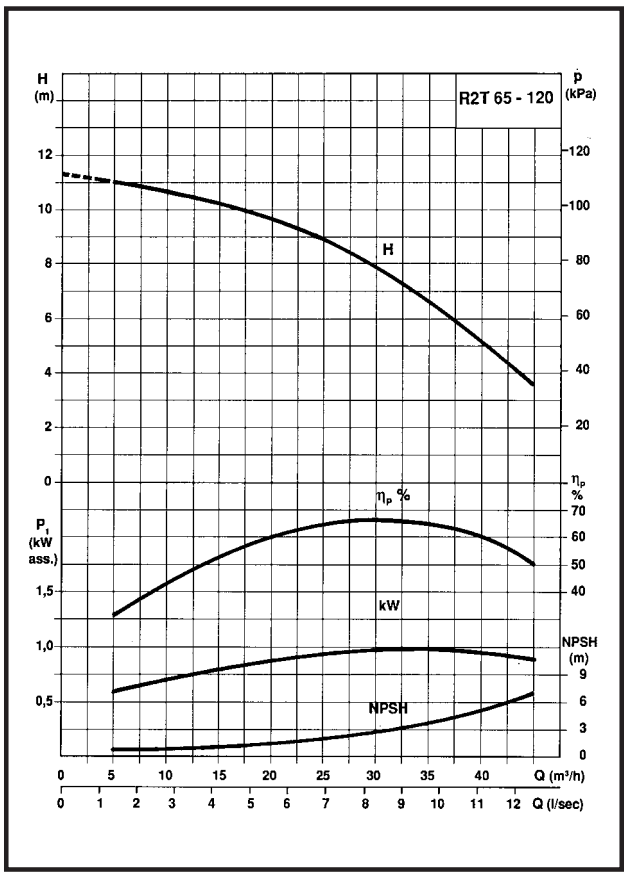

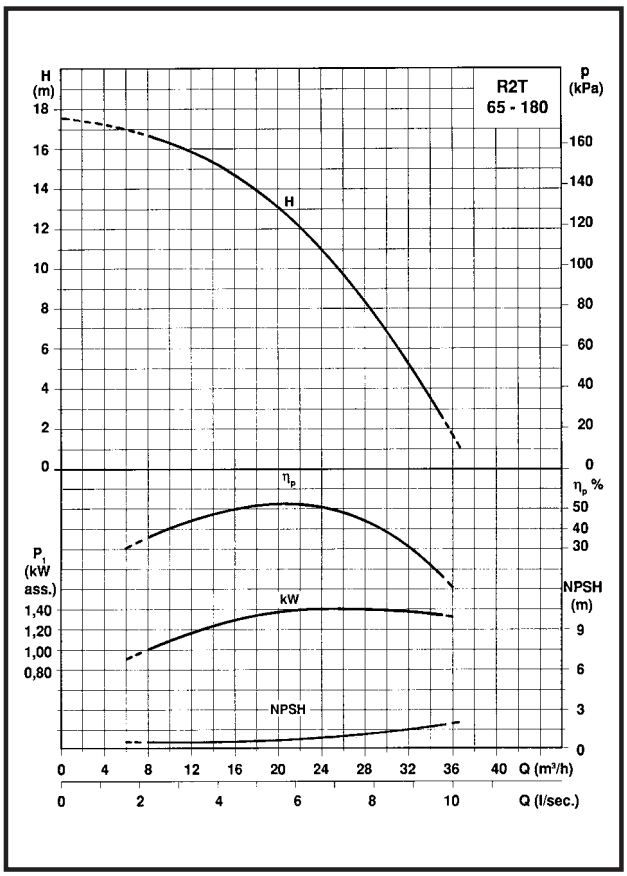

TABELLA DELLE PRESTAZIONI

CODE	MODEL	PN (bar)	Motor power (Kw)	Amp. 3x400V max	Amp. 3x230V min	n (min⁻¹)	I_a / I_n (%)	Q L/1'	0	200	300	400	500	750	1000
								Q m³/h	0	12	18	24	30	45	60
B2001041	R4T 80 - 30	6	0,25	1,10	1,90	1380	4,6	Discharge head in meters	3,7	3,3	3,0	2,5	2,0		
B2000100		10													
B2001043	R4T 80 - 60	6	0,75	2,25	3,90	1405	5,1		6,0	5,8	5,6	5,3	4,9	3,3	
B2000110		10													
B2001047	R2T 80 - 120	6	2,2	4,80	8,30	2870	4,8		11,7	11,4	11,2	10,6	10,3	8,4	5,5
B2000120		10													
B2001045	R2T 80 - 180	6	2,2	4,80	8,30	2870	4,8		17,6	17,0	16,4	15,0	13,4	6,4	
B2000130		10													

Counterflanges not included

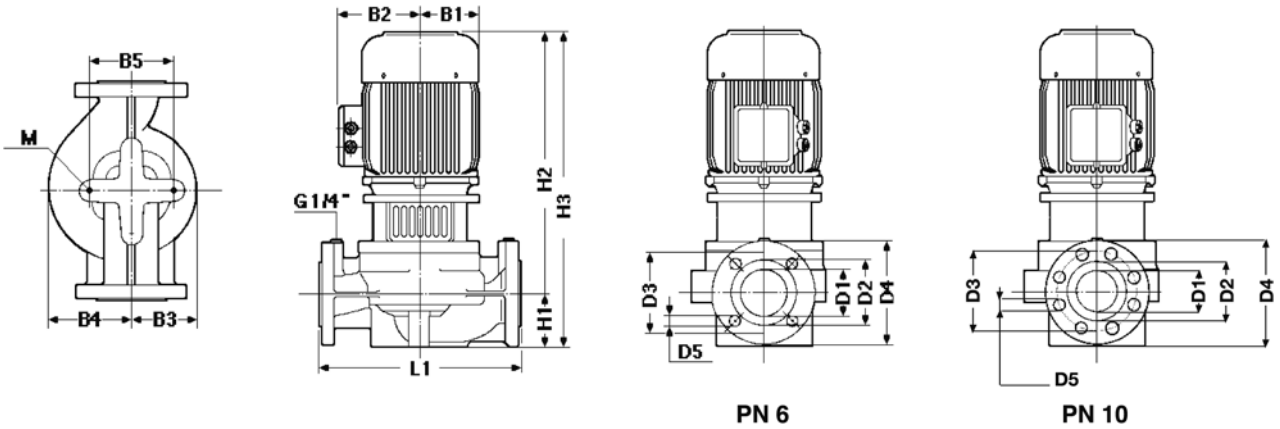

DIMENSIONS AND WEIGHTS PN 6

Model	PN bar	Dimensions mm. D1	D2	D3	D4	D5	n°D5	H1	H2	H3	L1	B1	B2	B3	B4	B5	M	Weight (Kg) net	gross	Packing volume (m³)
R4T 80 - 30	6	80	128	150	190	19	4	97	348	445	360	70	101	101	130	96	M12	32	35	0,073
R4T 80 - 60	6	80	128	150	190	19	4	97	383	480	360	80	115	101	130	96	M12	36	39	0,073
R2T 80 - 120	6	80	128	150	190	19	4	97	433	530	360	90	115	101	130	96	M12	41	44	0,073
R2T 80 - 180	6	80	128	150	190	19	4	97	433	530	360	90	115	101	130	96	M12	41	44	0,073

DIMENSIONS AND WEIGHTS PN 10

Model	PN bar	Dimensions mm. D1	D2	D3	D4	D5	n°D5	H1	H2	H3	L1	B1	B2	B3	B4	B5	M	Weight (Kg) net	gross	Packing volume (m³)
R4T 80 - 30	10	80	128	160	200	19	8	97	348	445	360	70	101	101	130	96	M12	32	35	0,073
R4T 80 - 60	10	80	128	160	200	19	8	97	383	480	360	80	115	101	130	96	M12	36	39	0,073
R2T 80 - 120	10	80	128	160	200	19	8	97	433	530	360	90	115	101	130	96	M12	41	44	0,073
R2T 80 - 180	10	80	128	160	200	19	8	97	433	530	360	90	115	101	130	96	M12	41	44	0,073

TABLE OF HYDRAULIC PERFORMANCE

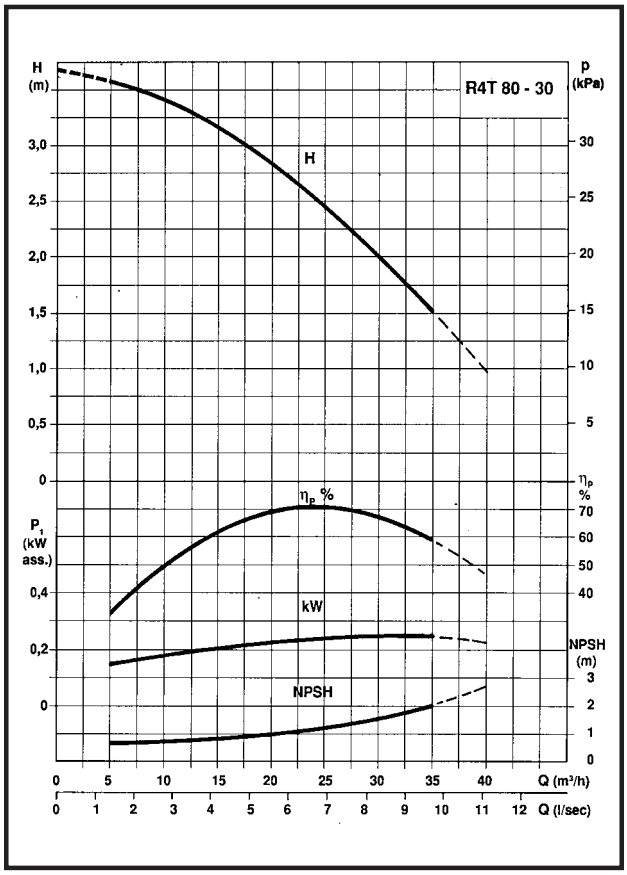

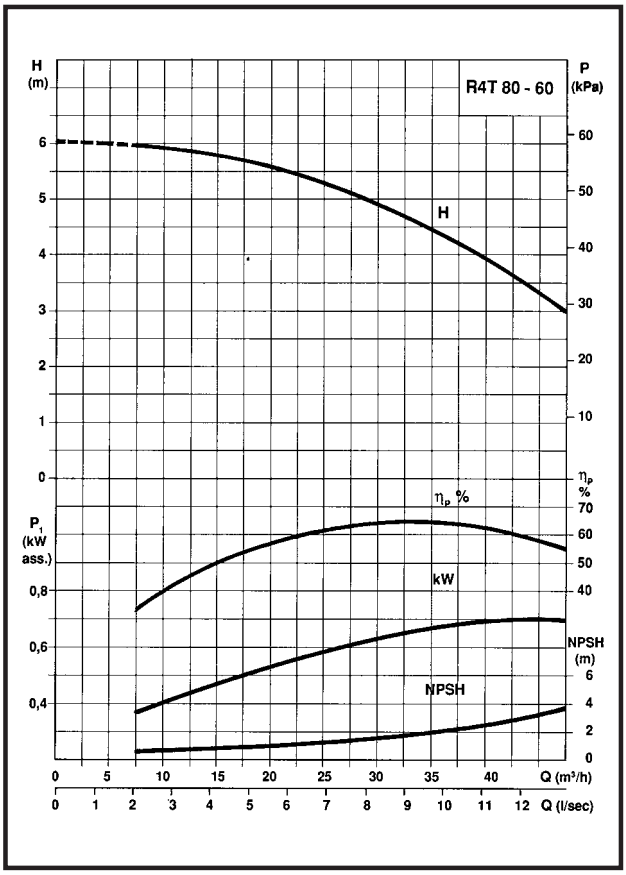

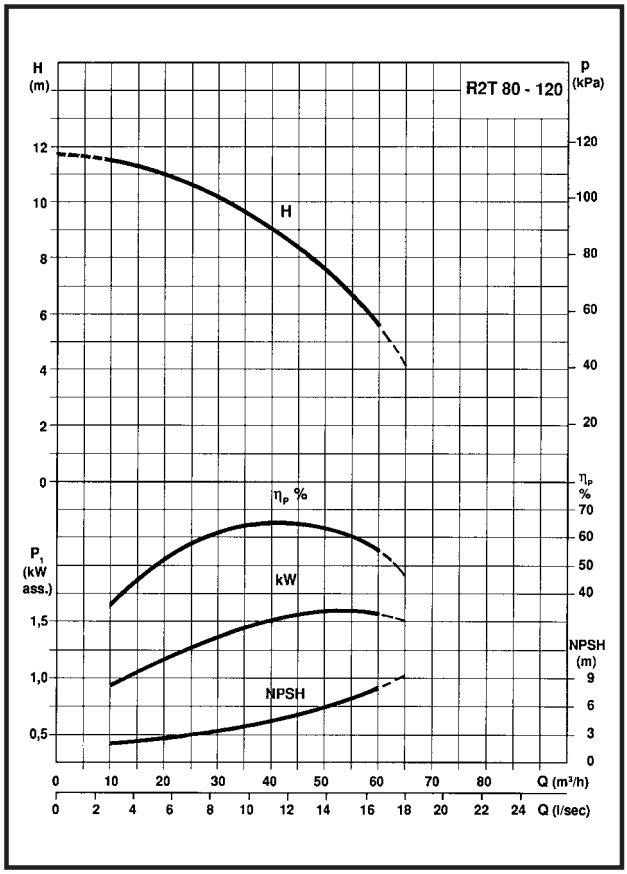

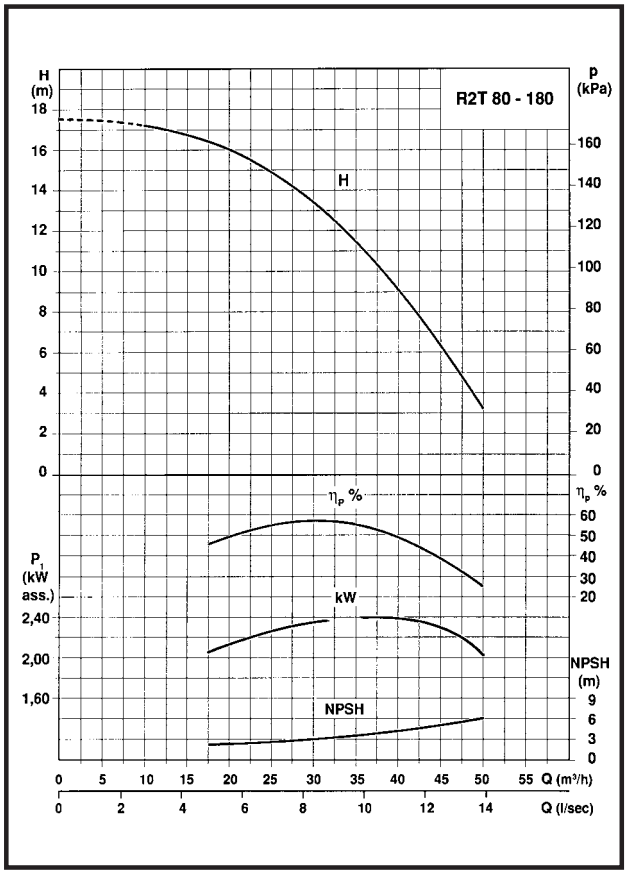

TABELLA DELLE PRESTAZIONI

CODE	MODEL	PN (bar)	Motor power (Kw)	Amp. 3x400V max	Amp. 3x230V min	n (min^{-1})	I_a / I_n (%)	Q L/1'	0	250	500	750	1000	1250	1400
								m³/h	0	15	30	45	60	75	84
B2001051	R4T 100 - 30	6	0,55	1,70	2,90	1390	4,5	Discharge head in meters	4,0	3,7	3,2	2,4	1,3		
B2000140		10													
B2001053	R4T 100 - 60	6	1,1	3,00	5,20	1395	4,0		6,0	5,9	5,7	5,3	4,6	3,4	
B2000150		10													
B2001057	R2T 100 - 120	6	3	6,30	10,90	2870	4,2		13,0	12,7	12,4	11,2	9,4	7,4	4,5
B2000160		10													

Counterflanges not included

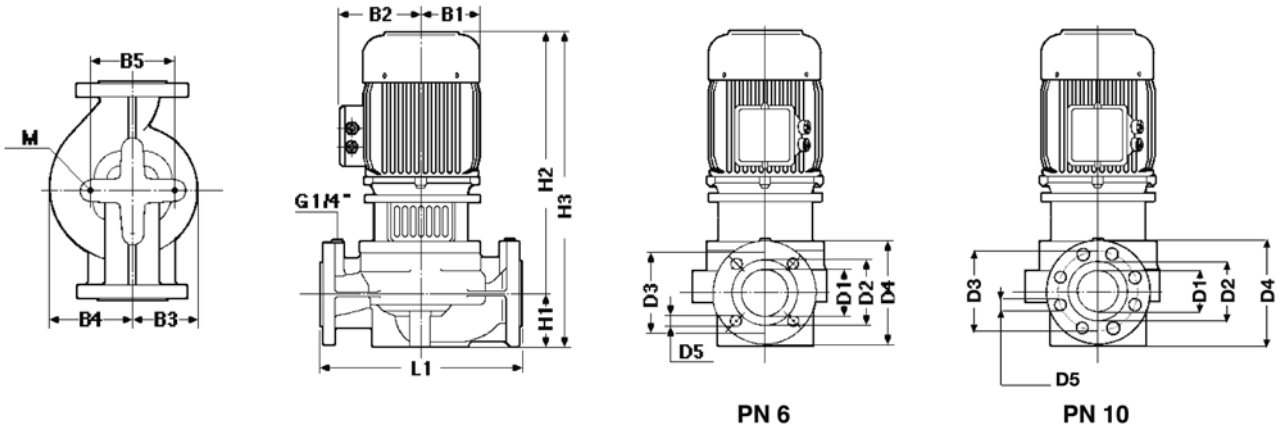

DIMENSIONS AND WEIGHTS PN 6

Model	PN bar	Dimensions mm. D1	D2	D3	D4	D5	n°D5	H1	H2	H3	L1	B1	B2	B3	B4	B5	M	Weight (Kg) net	gross	Packing volume (m³)
R4T 100 - 30	6	100	148	170	210	19	4	107	421	528	450	80	115	101	167	144	M16	49	56	0,249
R4T 100 - 60	6	100	148	170	210	19	4	107	457	564	450	90	115	101	167	144	M16	57	64	0,249
R2T 100 - 120	6	100	148	170	210	19	4	107	507	614	450	100	130	101	167	144	M16	62	69	0,249

DIMENSIONS AND WEIGHTS PN 10

Model	PN bar	Dimensions mm. D1	D2	D3	D4	D5	n°D5	H1	H2	H3	L1	B1	B2	B3	B4	B5	M	Weight (Kg) net	gross	Packing volume (m³)
R4T 100 - 30	10	100	148	180	220	19	8	107	421	528	450	80	115	101	167	144	M16	49	56	0,249
R4T 100 - 60	10	100	148	180	220	19	8	107	457	564	450	90	115	101	167	144	M16	57	64	0,249
R2T 100 - 120	10	100	148	180	220	19	8	107	507	614	450	100	130	101	167	144	M16	62	69	0,249
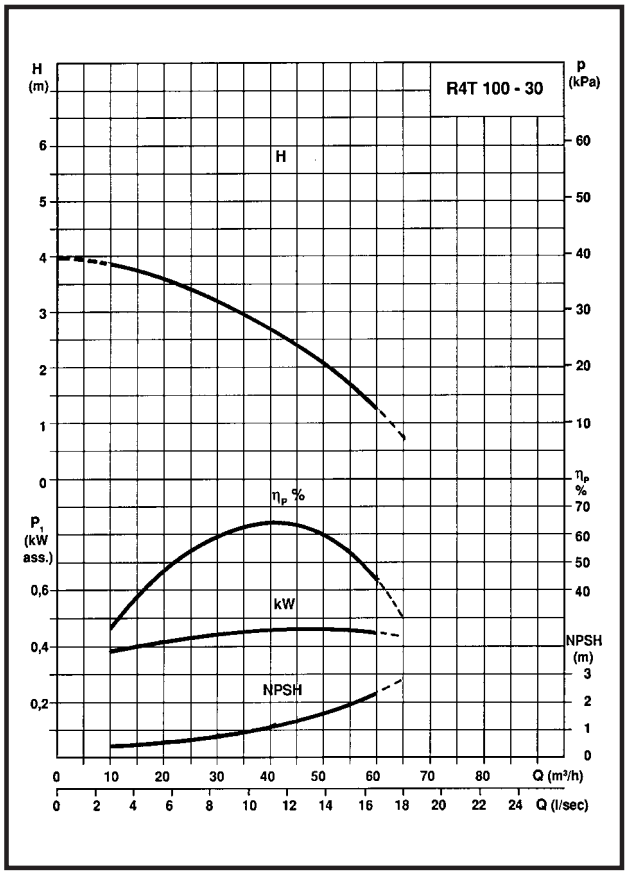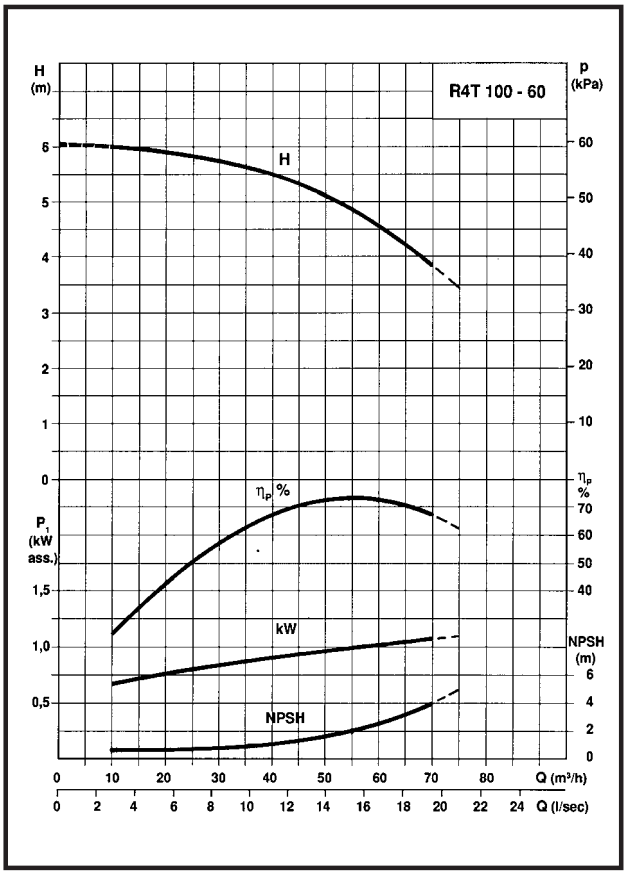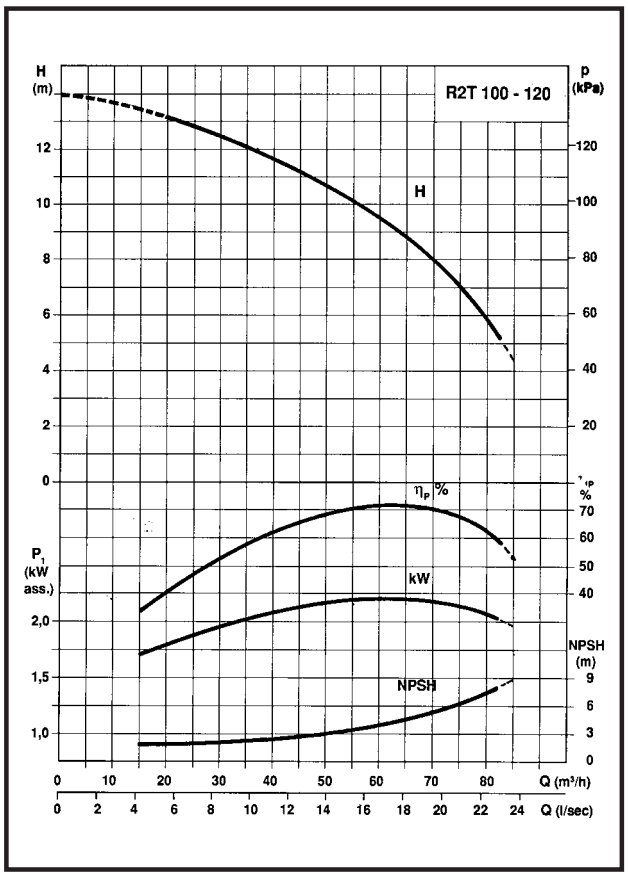
TABLE OF HYDRAULIC PERFORMANCE