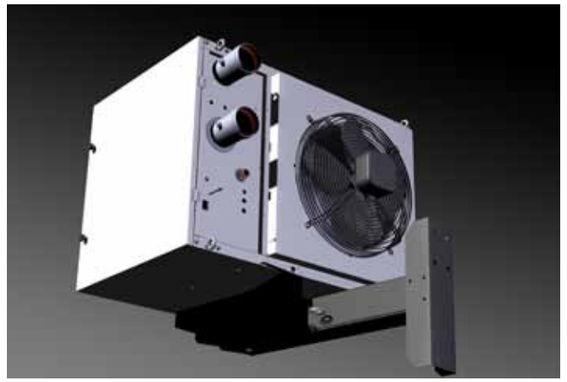

RAPID: the quick and ecological solution

Advanced equipment using leading-edge technology of pre-mixing air and gas, thus sensibly reducing NOx and CO emissions.

CLEAN COMBUSTION
A burner with total air-gas premix is the main feature of RAPID heaters.

Its advantages are:
- No emissions of carbon monoxide (CO = 0).
- Very low emission of nitrogen oxides, below 80 mg/kW (NOx < 80 mg/kW).
- Minimised emission of carbon dioxide as a consequence of high-efficiency combustion and reduced fuel consumption.

NO NEED FOR A HEAT PLANT
Warm air heaters can be installed in the spaces to be heated and do not require a separate room nor an enclosure that would reduce useful space

SYSTEM MODULARITY
The total heat requirement can be met by multiple appliances installed inside the room, thereby making the installation convenient and rational: thermal output can be managed on an area basis and new units can be installed if additional requirements arise.

RAPID / Features

FURNACE
Furnace and air/flue exchanger are entirely built with mild stainless steel (low carbon content) to assures maximum reliability and long life cycle. The drop-shaped furnace and the air/flue exchanger, whose tube bundle is custom designed, guarantees performance that place RAPID heaters among the leading units for heat efficiency.

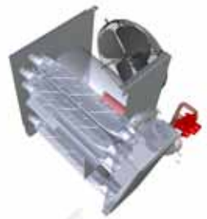

PREMIX BURNER
The burner is entirely made of AISI 430 steel and undergoes specific engineering processing that guarantees top reliability and high thermal-mechanical performance. The burner assembly, including the airgas valve, allows clean combustion with the lowest emission of polluting elements.

AIR/GAS MIXING: GUARANTEED SAFETY
An advanced technique of air/gas mixing guarantees total safety. The gas valve delivers gas according to the air: gas ratio set at the factory. If combustion air fails, the gas valve shuts up. If combustion air decreases, the valve automatically reduces gas flow while maintaining optimal combustion parameters.

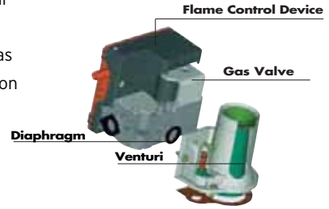

SAFETY AND CONTROL DEVICES
The following devices are installed on RAPID heaters:
1. Safety thermostat with manual reset and positive safety
2. Electronic ignition device for the burner and ionisation flame control device
3. Ignition and flame detection electrode

VERSATILITY OF INSTALLATION
RAPID heaters can also be hanged to the roof by means of suspension eyebolts and can blow air vertically or horizontally. For horizontal air blow, G14444.08 kit is supplied, including supporting eye-bolts. For vertical air blow, the heater is supplied with G14437 kit and additional thermostats for fan control.

RAPID / Technical Data

Model	RA015	RA024	RA032	RA035	RA043	RA054
EC Approval	0694BN4077	0694BN4077	0694BN4077	0694BN4077	0694BN4077	0694BN4077
Nominal Heat Input kW	16,5	26,5	34,8	38,7	47,5	58,0
Nominal Heat Output kW	15,3	24,3	31,7	34,9	43,6	53,4
Efficiency %	92,6	91,8	91,2	90,2	91,8	92,1
Gas Consumption (G20) (15°C-1013 mbar) (m^3/h)	1,75	2,8	3,68	4,1	5,03	6,14
Gas Consumption (G30/G31) (15°C-1013 mbar) (m^3/h)	1,06	1,71	2,24	2,49	3,06	3,73
Gas Consumption (G2.350) (15°C-1013 mbar) (m^3/h)	2,44	3,93	5,16	5,73	7,04	8,59
Ø Separate Air Inlet/Flue Exhaust Pipe mm	80/80	80/80	80/80	80/80	80/80	80/80
Available Pressure on Flue Exhaust Pa	50	50	90	90	110	110
Air Flow (T 15°C) m^3/h	1.600	3.050	3.050	3.800	5.000	6.250
Air Throw m	22	22	24	25	30	32
Δ T Air °C	27,4	22,9	29,8	26,3	25,0	24,5
Fan Speed rpm	1.050	1.270	1.270	1.350	1.270	1.350
Fan Number/ Ø Angle mm/°	1x350/25°	1x400/22°	1x400/22°	1x420/27°	2x400/22°	2x420/27°
Power Supply V/Hz	230/50	230/50	230/50	230/50	230/50	230/50
Power Absorbed W	220	260	260	330	500	620
Noise Level (Free Field Conditions, 6m) dB(A)	39,9	44,4	44,4	47,5	47,4	50,5

RAPID 2 STAGES/ Technical Data

Model		RA015	RA024	RA032	RA035	RA043	RA054
Heat Input and Efficiency in High Flame mode							
Nominal Heat Input	kW	16,5	26,5	34,8	38,7	47,5	58,0
Nominal Heat Output	kW	15,3	24,3	31,7	34,9	43,6	53,4
Efficiency	%	92,6	91,8	91,2	90,2	91,8	92,1
Heat Input and Efficiency in Low Flame mode							
Nominal Heat Input	kW	16,5	26,5	34,8	38,7	47,5	58,0
Nominal Heat Output	kW	12,34	19,76	27,1	29,32	35,91	42,2
Efficiency	%	93,57	92,62	91,74	91,7	92,19	93,0

RAPID / Dimensions

Model	Overall Dimensions				Louvres			Brackets			Gas Supply			Weight
	L	B	H	V	HB	LB	IM	IS	ID	DM	GAS	GO	GV	Kg
RA015	720	640	650	140	530	415	450	116	174	475	3/4''	186	263	70
RA024	900	640	650	140	530	595	450	206	264	475	3/4''	186	263	80
RA032	900	640	650	140	530	595	450	206	264	475	3/4''	186	263	84
RA035	900	640	650	140	530	595	450	206	264	475	3/4''	186	263	90
RA043	1240	640	650	140	530	935	780	228	252	475	3/4''	186	263	112
RA054	1240	640	740	140	620	935	780	228	252	475	3/4''	183	352	117

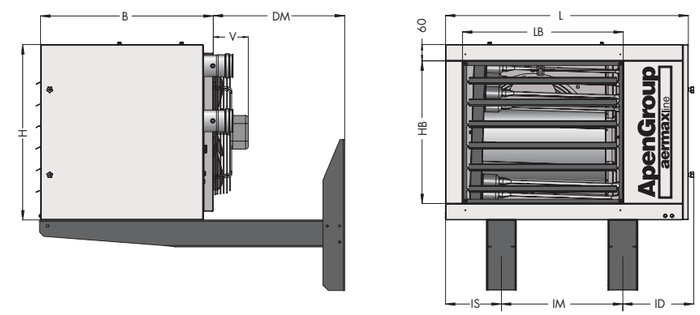

Distribuitor: CALOR SRL
Str. Progresului nr. 30-40, sector 5, Bucuresti
tel: 021.411.44.44, fax: 021.411.36.14
www.calorserv.ro - www.calor.ro